ORDER NO. RD8009-5138C

Service Manual

FM/MW/FM STEREO RADIO CASSETTE

DOLBY SYSTEM

Radio Cassette

RX-A2S

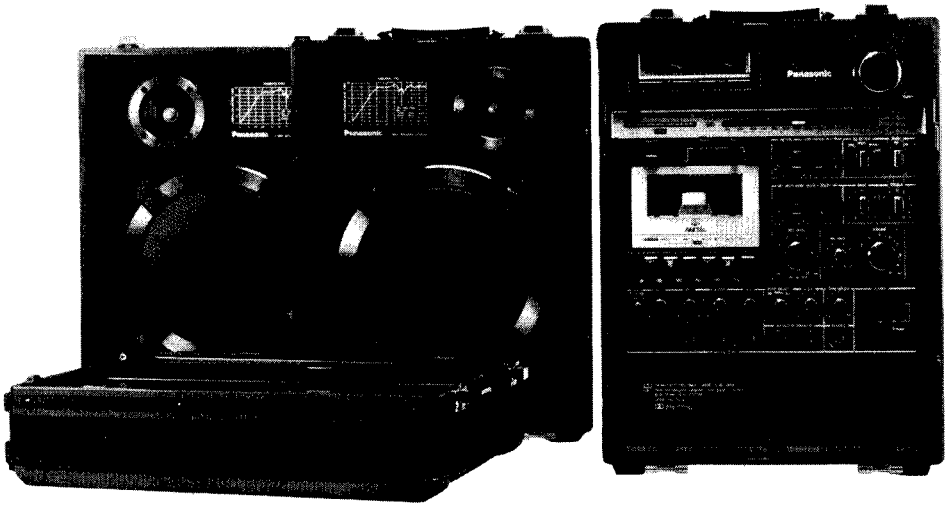

*"Dolby" and the double-D symbol are trade marks of Dolby Laboratories.
*Noise reduction system manufactured under license from Dolby Laboratories.

SPECIFICATIONS

Radio Frequency Range:	FM; 88~108MHz MW; 525~1605kHz (571~187m)
Power Requirement:	AC 100~110/115~127/200~220/230~250V, 50/60Hz Power consumption; 90W Battery; 15V (ten-UM-1, "D" size dry batteries) Car battery; 13.2V (with car battery cord)
Power Output:	90W (45W×2).....PMPO 50W (25W×2).....RMS (max.)
Speakers:	Woofer; 20cm PM dynamic speaker ×2 Tweeter; 6.5cm PM dynamic speaker×2
Frequency Range:	60~12,000Hz (with normal tape) 60~14,000Hz (with CrO_2 tape) 60~15,000Hz (with tape corresponding to Metal type)
Recording System:	AC bias 57kHz/55kHz, AC erase
Tape Speed:	4.8cm/s (1-7/8 i.p.s.)
Program Time:	1 hour with C-60 cassette tape
Fast Forward and Rewind Time:	Approx. 120 seconds with C-60 cassette tape
Track System:	4-track, 2-channel stereo recording and playback

Jacks:	
Input:	MIC (STEREO POSITION); sensitivity 0.5mV/applicable microphone impedance 600Ω (each) MIC (MONO POSITION); sensitivity 2.0mV/applicable microphone impedance 600Ω (each) GUITAR; sensitivity 10mV/150kΩ over AUX; sensitivity 25mV/10kΩ over LINE IN; sensitivity 250mV/50kΩ over PHONO; sensitivity 2.0mV/5kΩ
Output:	LINE OUT; reference output level 0.39V/10kΩ under EXT SP; 4~8Ω HEADPHONES; 8Ω
Dimensions (W×H×D):	Center unit; 31.9cm×44.3cm×24.2cm $12^5/_8$"×$17^7/_{16}$"×$9^1/_2$" Speaker box; 31.9cm×44.3cm×29.0cm $12^5/_8$"×$17^7/_{16}$"×$11^7/_{16}$"
Weight:	Center unit; 12.7kg (28 lbs 3 oz) without batteries Speaker box; 9.4kg (20 lbs 11 oz)

06050292 91004988 13
SM-RXA2S 1 ST
SERVICE MANUAL

Specifications are subject to change without notice.

Panasonic

Matsushita Electric Trading Co., Ltd.
P.O. Box 288, Central Osaka Japan

LOCATION OF CONTROLS

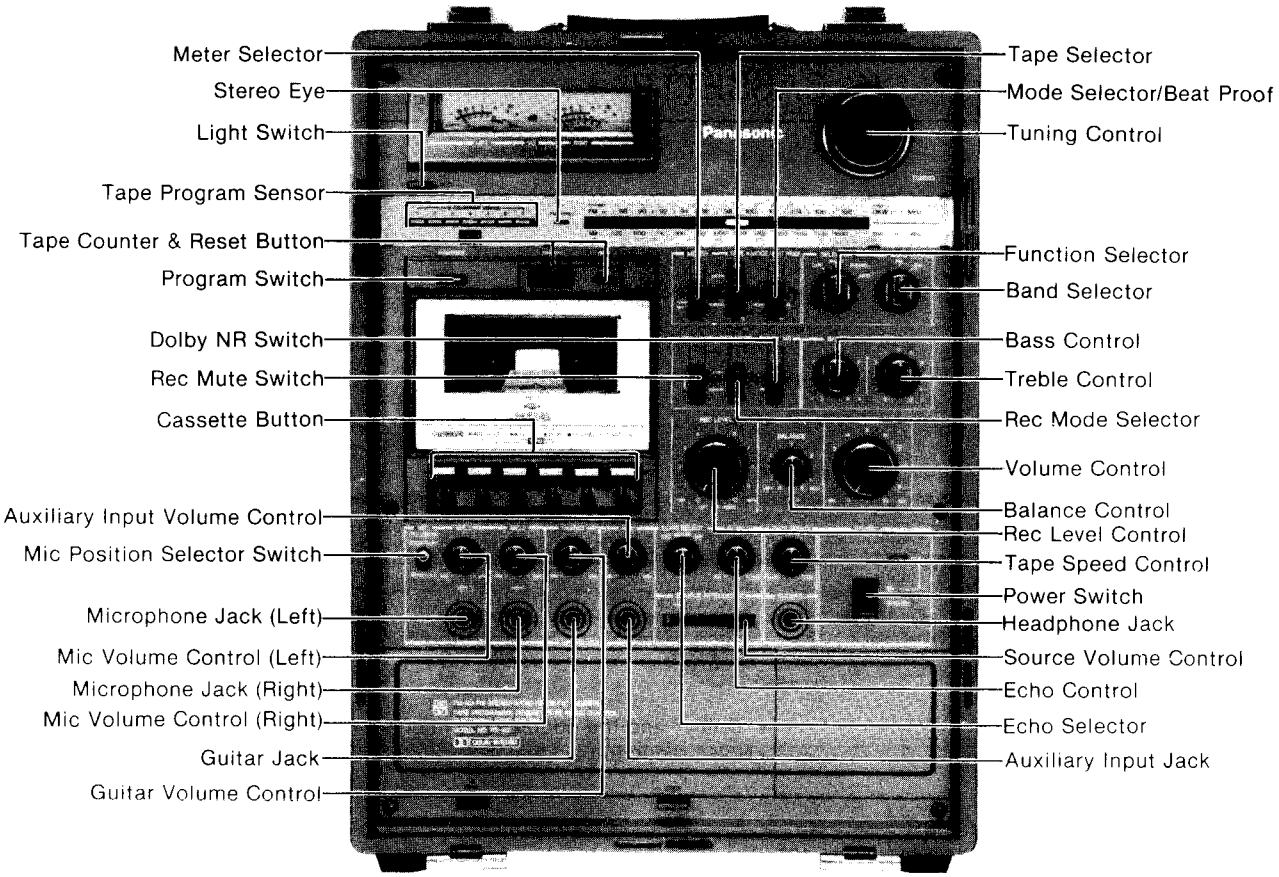

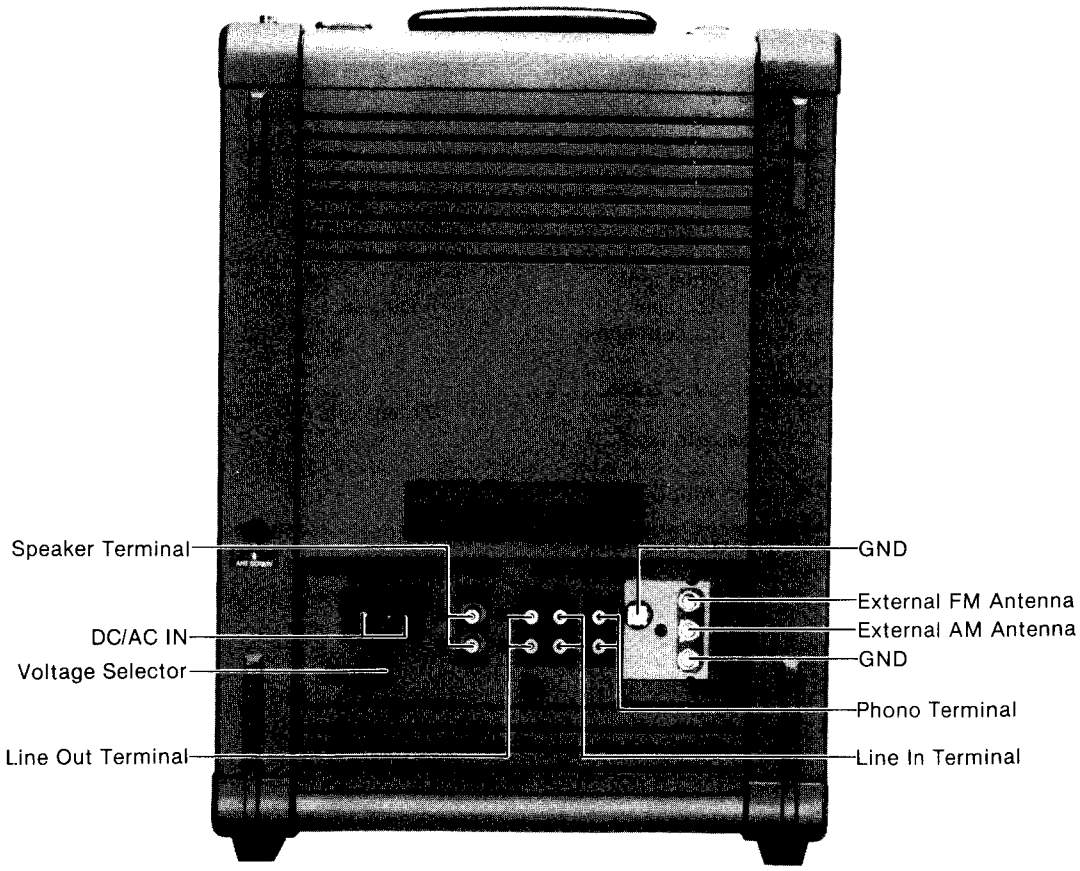

DISASSEMBLY INSTRUCTIONS

❶ Remove 23 Knobs
❷ Remove Cassette Lid

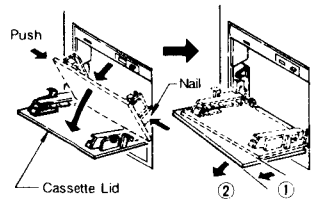

❸ Remove Front Panel

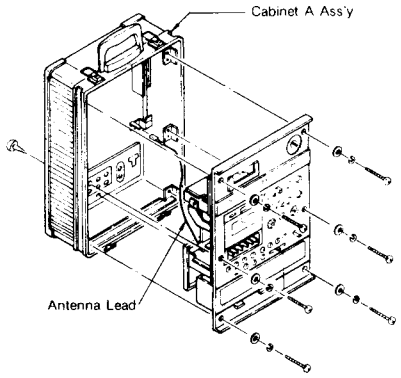

❹ Remove Cassette Deck

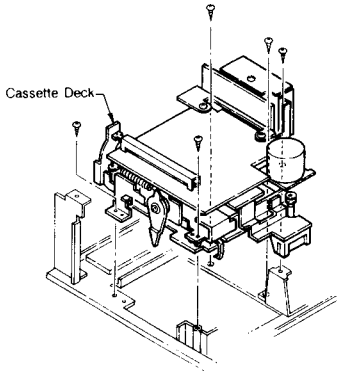

❺ Remove TPS P.C. Board

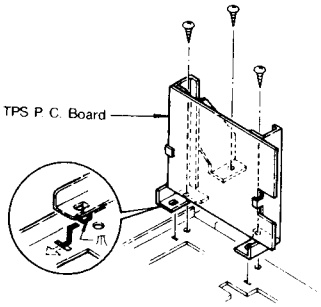

❻ Remove Power AMP P.C. Board

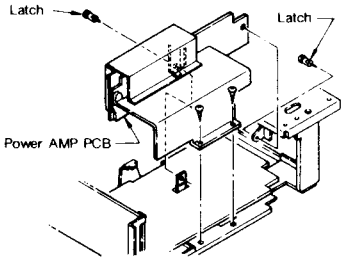

❼ Remove Chassis

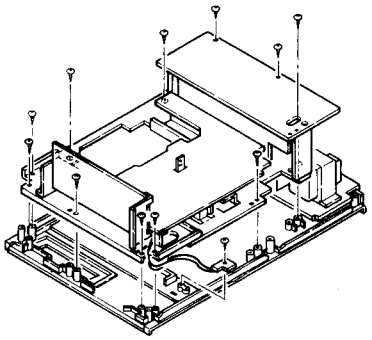

❽ Remove Terminal P.C. Board

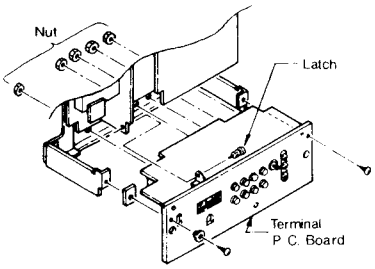

❾ Remove 4 Screws & 8 Nuts

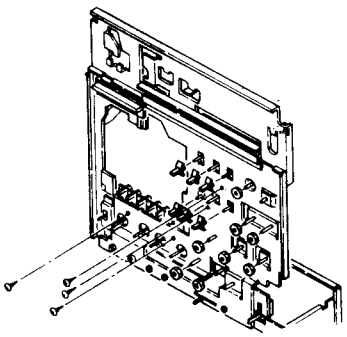

❿ Remove RF P.C. Board

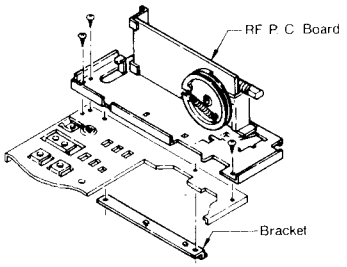

⓫ Remove Cassette Deck P.C. Board

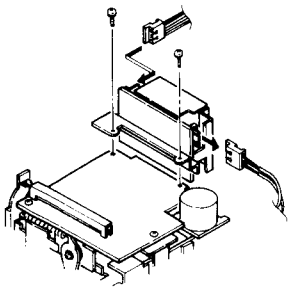

⓬ Remove Cassette Deck P.C. Board

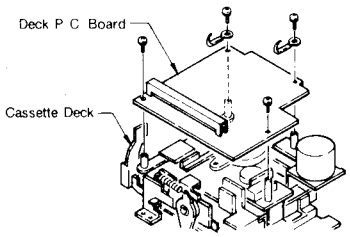

■ To Replace Parts on P.C. Board .....
Cassette Tape ...Refer to (3), (11), (12)
TPS .....Refer to (3), (5)
Power AMP .....Refer to (3), (4), (5)
Others .....Refer to (1)~(12)

■ To Remove Cassette Tape Deck.....
Pull Cassette Buttons and
Refer to (2)~(4).

■ To Remove Chassis .....
Refer to (1)~(4), (7).

NOTE: When assembling or disassembling, be carefull not to damage the painted part of any panels.

ALIGNMENT INSTRUCTIONS

■ Radio

Notes

1. Volume Control .....Maximum (AM-IF and RF), Center (FM-RF), Minimum (FM-IF)
2. Treble Control .....Center
3. Bass Control .....Center
4. Balance Control .....Center
5. Function Selector .....AM, FM
6. Power Switch .....ON
7. Output of signal generator should be no higher then necessary to obtain output reading.
8. Make certain that speaker system is connected to the receiver when aligning (or use 4Ω dummy load resistors).

STEP	SIGNAL GENERATOR OR SWEEP GENERATOR		RADIO DIAL SETT SETTING	INDICATOR (VTVM or SCOPE)	ADJUST	REMARKS
	CONNECTION	FREQUENCY				
AM-IF AND RF ALIGNMENT						
1	Fashion loop of several turns of wire and radiate signal into receiver	455kHz 30% Mod with 400Hz	Point of non-interference	Output meter across speaker jack (L) (lamp 4Ω)	T201 (AM 1st IFT) T202 (AM 2nd IFT)	Adjust for maximum output.
2		550kHz 30% Mod with 400Hz	550kHz (688mm)		L201 (AM ANT Coil) L202 (AM OSC Coil)	Adjust for maximum output by sliding coil (L201) along ferrite core.
3		1500kHz 30% Mod with 400Hz	1500kHz (106.97mm)		CT201 (AM ANT Tnimmer) CT202 (AM OSC Trimmer)	Adjust for maximum output. Repeat steps (2) and (3).
Note: Cement antenna coil (L201) with wax after completing alignment.						
FM-IF ALIGNMENT						
1	High side through 1pF to body of IC101.	10.7MHz (400kHz (SWP	Point of non-interference	Connect vert amp input of scope between point TP201 and TPE.	T101 (FM 1st IFT) T203 (FM 2nd IFT) (Refer to Note)	Adjust T101 for maximum amplitude and symmetrical curve. 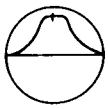
2					T204 (FM Disc. IFT)	Adjust for maximum amplitude and proper linearity between about 100kHz markers.
Note: Before aligning step 1, turn the cores of T204 fully counterclockwise.						
FM-RF ALIGNMENT						
1	Connect to EXT FM antenna terminal through Dummy antenna Common to chassis	87.35MHz 30% Mod with 400Hz	87.35 (0mm)	Output meter across speaker jack (L). (lamp 4Ω)	L102 (FM OSC Coil)	Adjust for maximum output.
		90MHz 30% Mod with 400Hz	90MHz (14.9mm)		L101 (FM ANT Coil)	
2		108.3MHz 30% Mode with 400Hz	108.3MHz (122.5mm)		CT102 (FM OSC Trimmer)	Adjust for maximum output. Repeat steps (1) and (2).
		106MHz 30% Mode with 400Hz	106MHz (106.8mm)		CT101 (FM ANT Trimmer)	

ALIGNMENT INSTRUCTIONS

■ FM Stereo Alignment

Control Positions:

Tuner: Volume Control .....Audible level of speaker sound
Tone Control .....Center
Function Selector .....FM
Balance Control .....Center

EQUIPMENT CONNECTION	ADJUST	REMARKS
Connect frequency counter to TP301 and TPE at 98MHz, non modulation with 60dB input.	VR302	Adjust VR302 for 19kHz±50Hz on frequency counter reading.

SEPARATION ALIGNMENT

Notes:

1. Stereo Modalator: Connect Stereo Modulator to EXT Mod terminal of signal generator.
2. Signal Generator: Modulation Rate of 19kHz Pilot signal 9%
   Modulation Rate of Right and Left Signal 30%
   Output Level 60dB
3. Tuner (Balance Control): Adjust balance control so that output level from both channels becomes equal.

REQUIPMENT CONNECTION			ADJUST	REMARKS
SIGNAL GENERATOR	VTVM	OSCILLOSCOPE		
Connect to EXT FM antenna teminal through dummy antenna.	Connect acros speaker jack	Connect verticel amp input of scope to terminal of VTVM.	VR301 (Separation Control)	Adjust VR301 for minimum indication of VTVM from the left side output when the right side of stereo signal is modulated. Adjust VR301 in the same way for the right side. Adjust for best balance between "L to R" and "R to L" separation.

Note: When Aligning separation, disconnect frequency counter.

ALIGNMENT POINTS (RADIO)

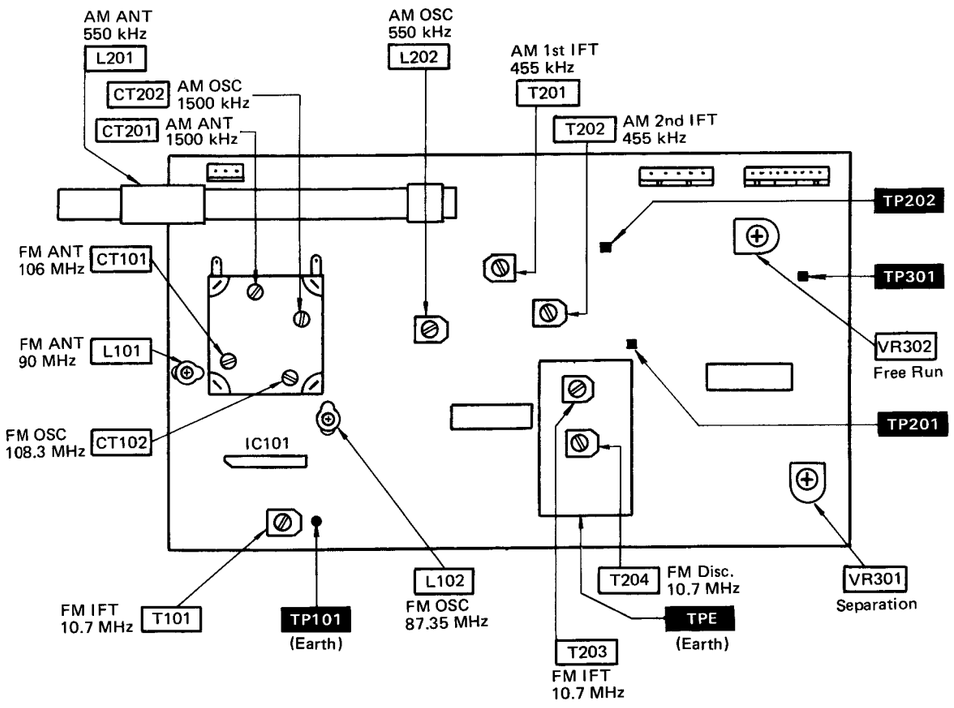

ALIGNMENT INSTRUCTIONS

■ Tape Deck

STEP	ALIGNMENT ITEM	VTVM CONNECTION Positive	VTVM CONNECTION Negative	TAFPE SELECTOR	ADJUST	REMARKS
1	Motor Speed	Speaker	Speaker	—	MOTOR VR	Play VTT656 and adjust for 300Hz± 15Hz indication on frequency counter.
1	Recording Bias	TP403 (L-Channel)	TP401	METAL	VR808 VR807	Adjust VR808 center, VR807 to get within 0.1mV difference reading on both VTVM.
		TP402 (R-Channel)	TP401			
3	Erase Bias	TP801	TP802	METAL	VR809	Adjust VR809 to get 140+10, −5mV reading on VTVM.
4	Recording Bias	TP803 (L-Channel)	TP401	NORMAL	VR808	Adjust VR808 to get 3.8+0.2, −0.4mV reading on VTVM. (CrO_2: 4.3~5.0mV, Metal: 7.6~9.0mV). Repeat steps 2~4.
		TP402 (R-Channel)	TP401			

AZIMUTH, DOLBY, REC CURRENT ALIGNMENT

STEP	ALIGNMENT ITEM	VTVM CONNECTION Positive	VTVM CONNECTION Negative	DOLBY SWITCH	TAPE DECK CONDITION	ADJUST	REMARKS
1	R/P Head Azimuth	Speaker	Speaker	OUT	PLAY	R/P Head Screw	• Playback a test tape (VTT653). • Turn R/P Head Screw to get max. output of speaker.
1	Dolby Level	TP405 (R-Channel)	TP401	IN	PLAY	VR405	Playback a test tape (VTT6130). Adjust VR405 and VR406 to get 580±20mV reading on VTVM.
		TP404 (R-Channel)	TP401			VR406	
3	REC Current	TP403 (L-CHannel)	TP401		REC	VR403	Connect TP802 to pin 1 of MC5. Apply 1kHz, 500mV signal to both TP404. TP401 & TP405 TP401, and then REC VR to get 410mV reading on VTVM. Adjust VR403 and VR404 to get 0.40±0.02mV reading on VTVM.
		TP402 (R-Channel)	TP401			VR404	

METER ALIGNMENT

STEP	ALIGNMENT ITEM	INPUT SIGNAL	ADJUST	REMARKS
1	VU Meter	—	VR811 (Rch) VR812 (Lch)	Playback a test tape (TMT-6130). Adjust VR811 and VR812 for, +3dB (DC mark).
2	Batter Meter	—	VR810	Adjust VR810 for 150% deflection at AC 220V power supply. 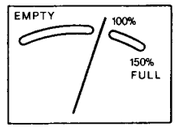

ALIGNMENT POINTS (TAPE DECK)

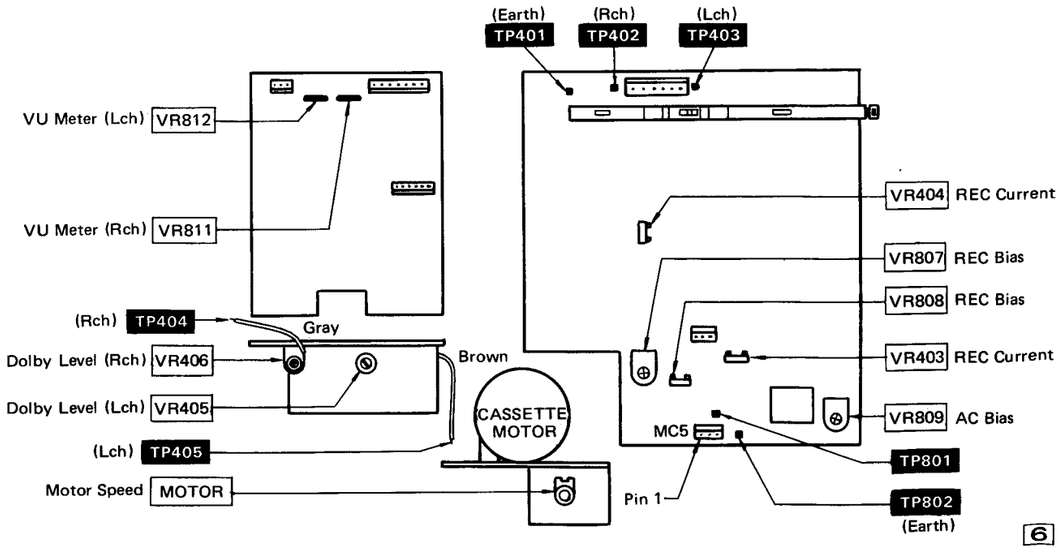

IC BLOCK DIAGRAMS

IC001 NE646BN

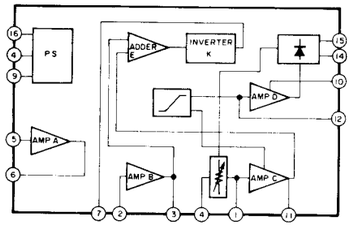

IC201 AN217P

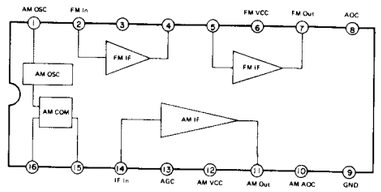

IC301 LA3350S

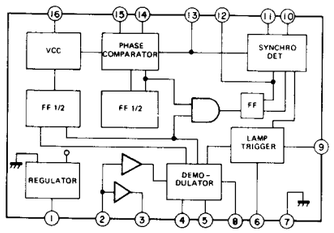

IC403, 404 UPD4066C

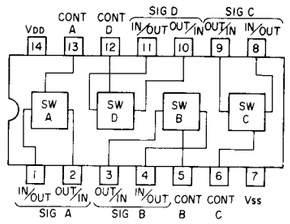

IC101 AN7213

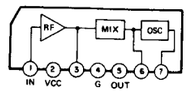

IC401 M51301P

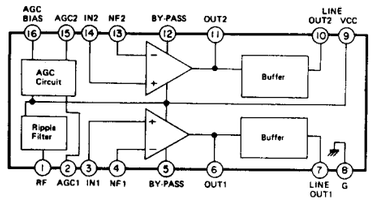

IC801 MN3007

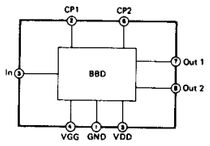

IC701 AN7156N

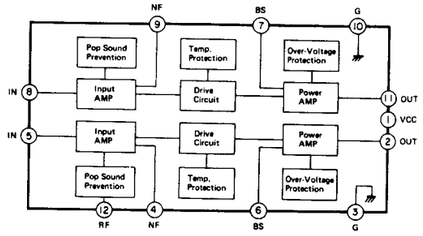

IC803, 804 AN6552

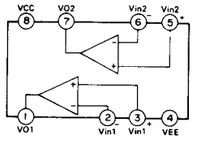

IC802 MN3101

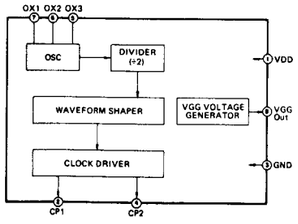

IC805 UPC566H

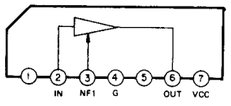

IC806 M54832P

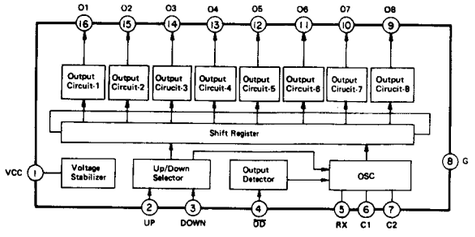

DIAL CORD STRINGING GUIDE

NOTE:
Tuning Capacitor.....
open position (minimum capacitance)
Dial Cord Length.....
125cm

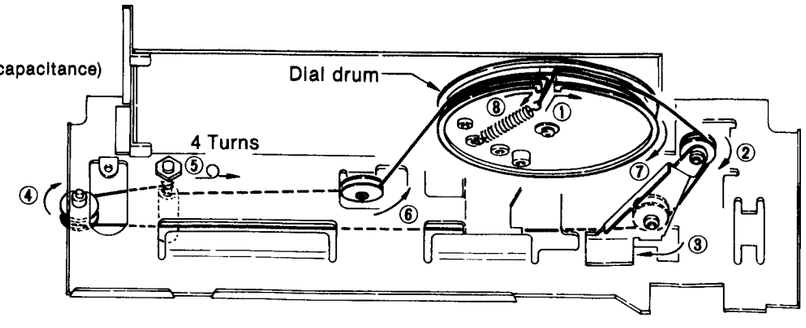

BLOCK DIAGRAM

■ RADIO TUNER SECTION

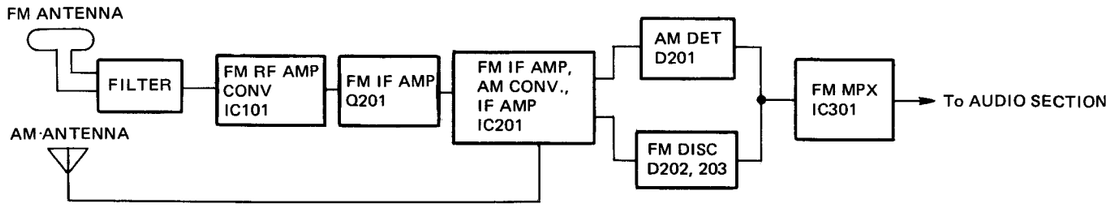

■ AUDIO SECTION

• **Recording**

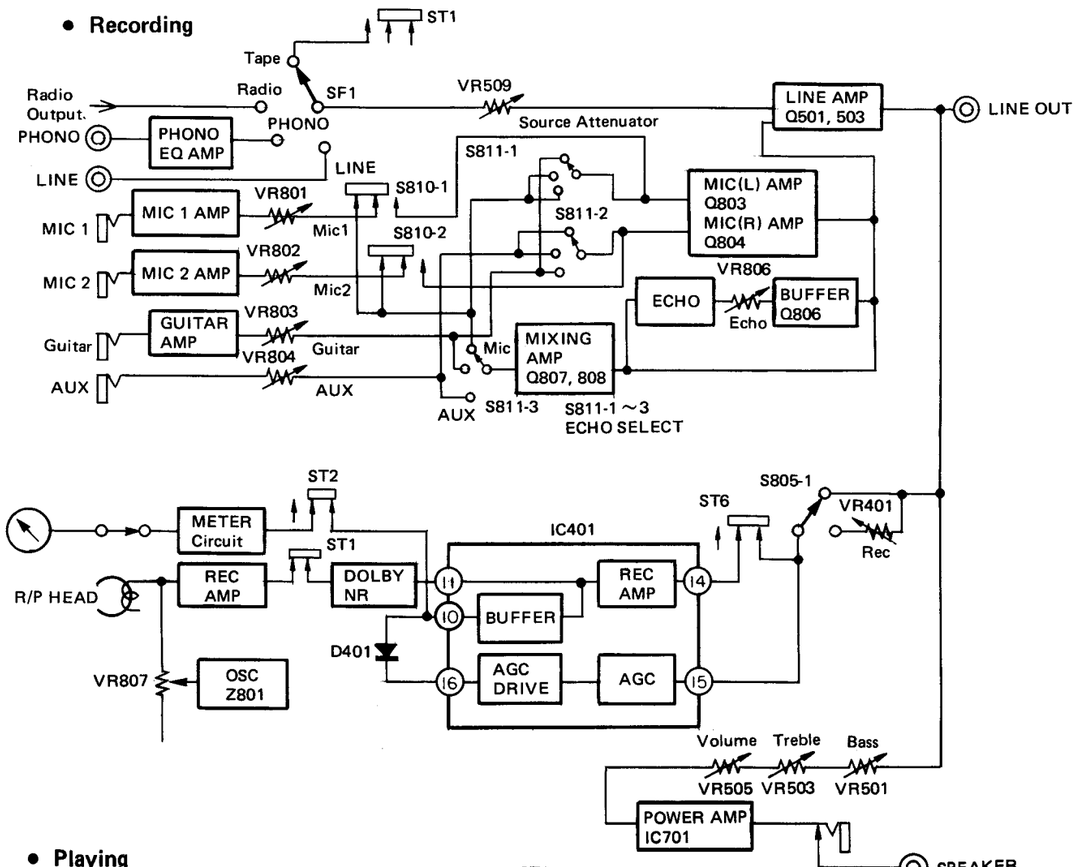

• **Playing**

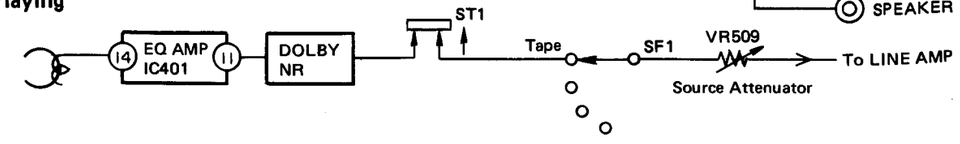

MECHANICAL PARTS

70 50 60 6 58 59 4 56 64 65 68 14 76 77 13 15 69 47 32 48 17 33 34 36 35 57 45 46 37 80 44 38 67 46 39 40

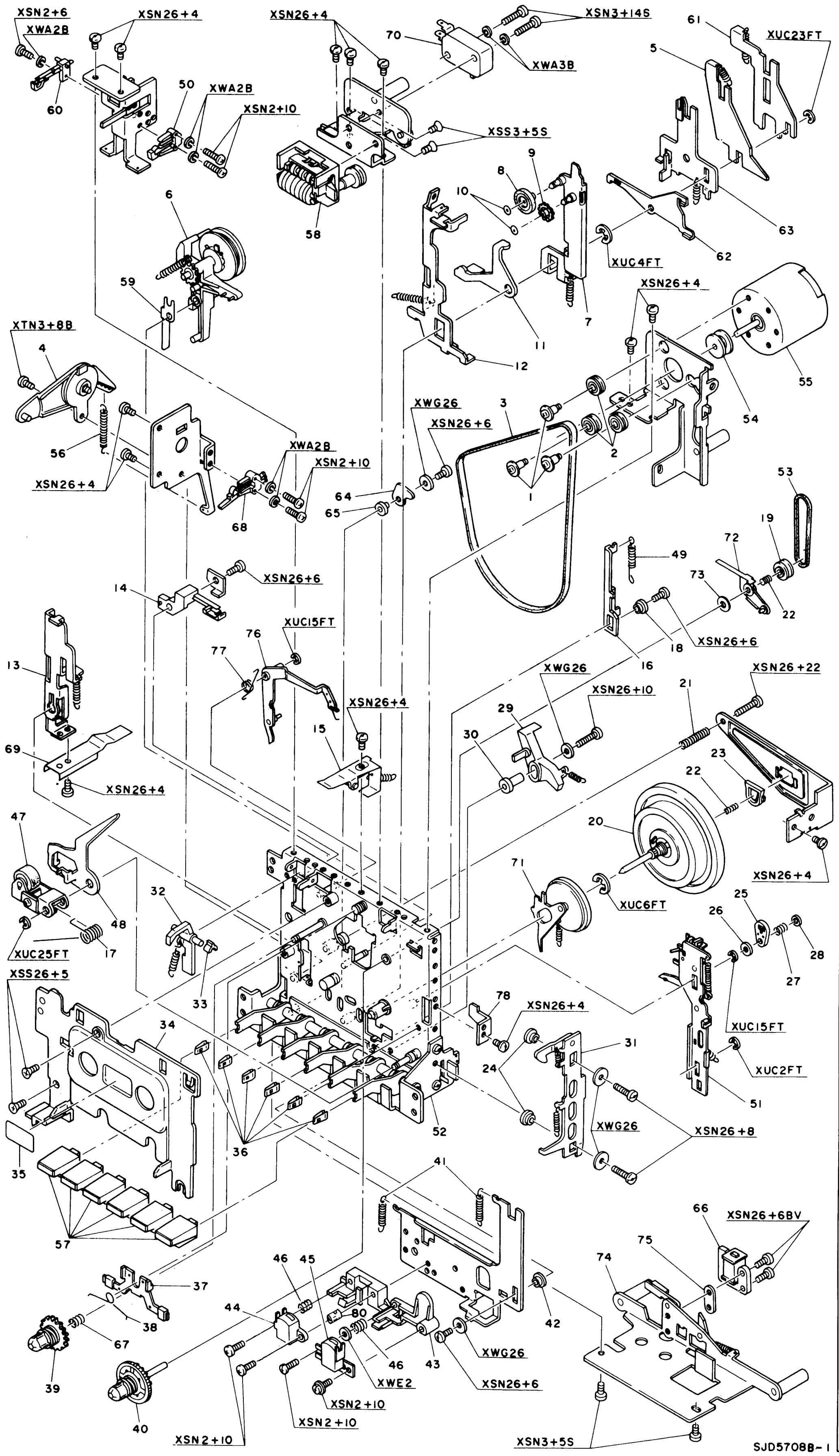

61 5 9 8 10 63 62 7 11 12 55 3 54 2 53 1 19 72 49 73 18 16 21 29 30 23 22 20 71 25 26 28 27 78 31 24 51 52 41 66 75 74 42 43

SJD57088-1

ELECTRICAL PARTS

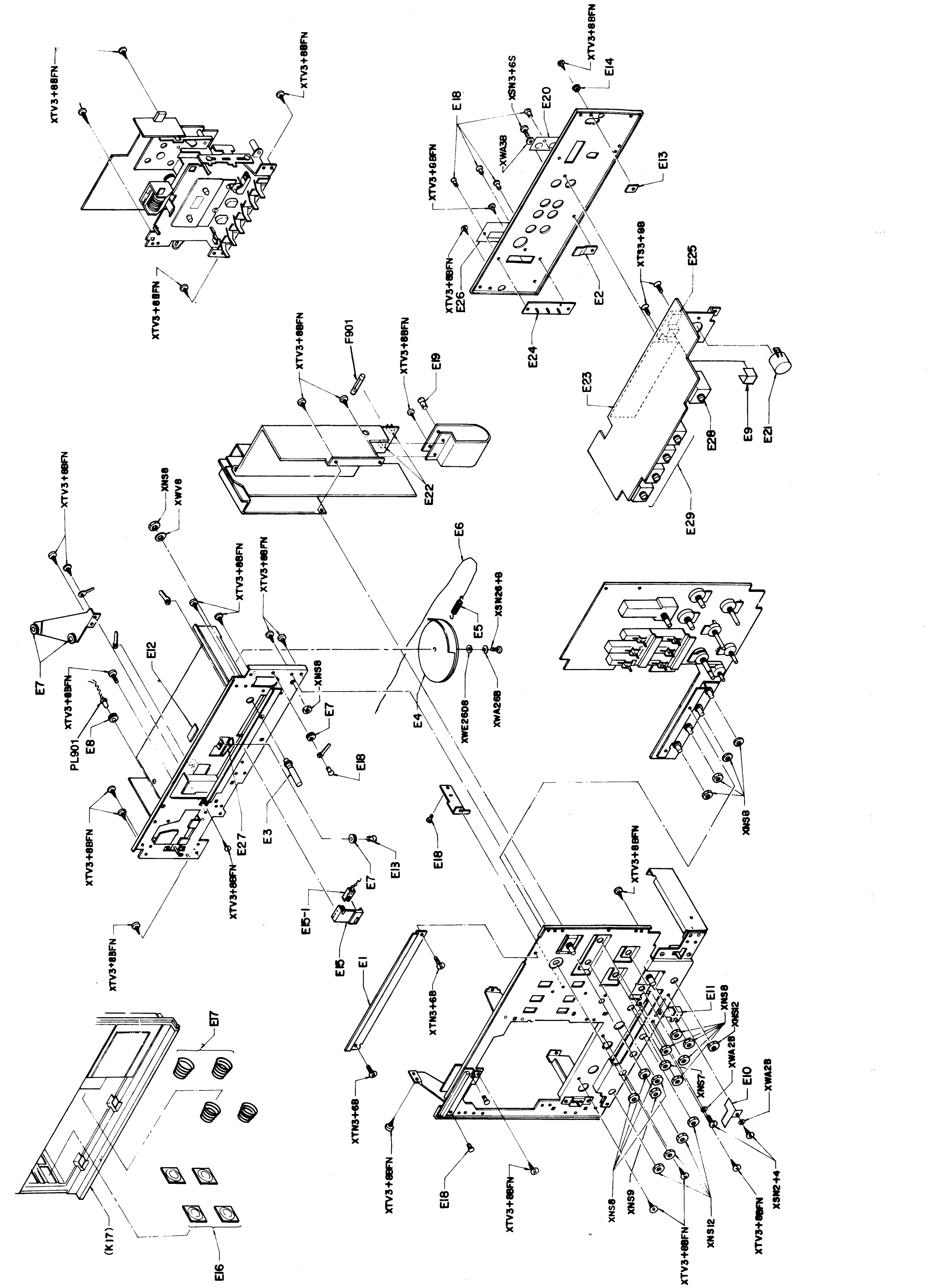

CABINET PARTS

61
5
9
8
10
63
62
7
11
12
55
3
54
2
53
1
19
72
49
73
18
16
21
29
30
23
22
20
71
25
26
28
27
78
31
24
51
52
41
66
75
74
42
43

ELECTRICAL PARTS

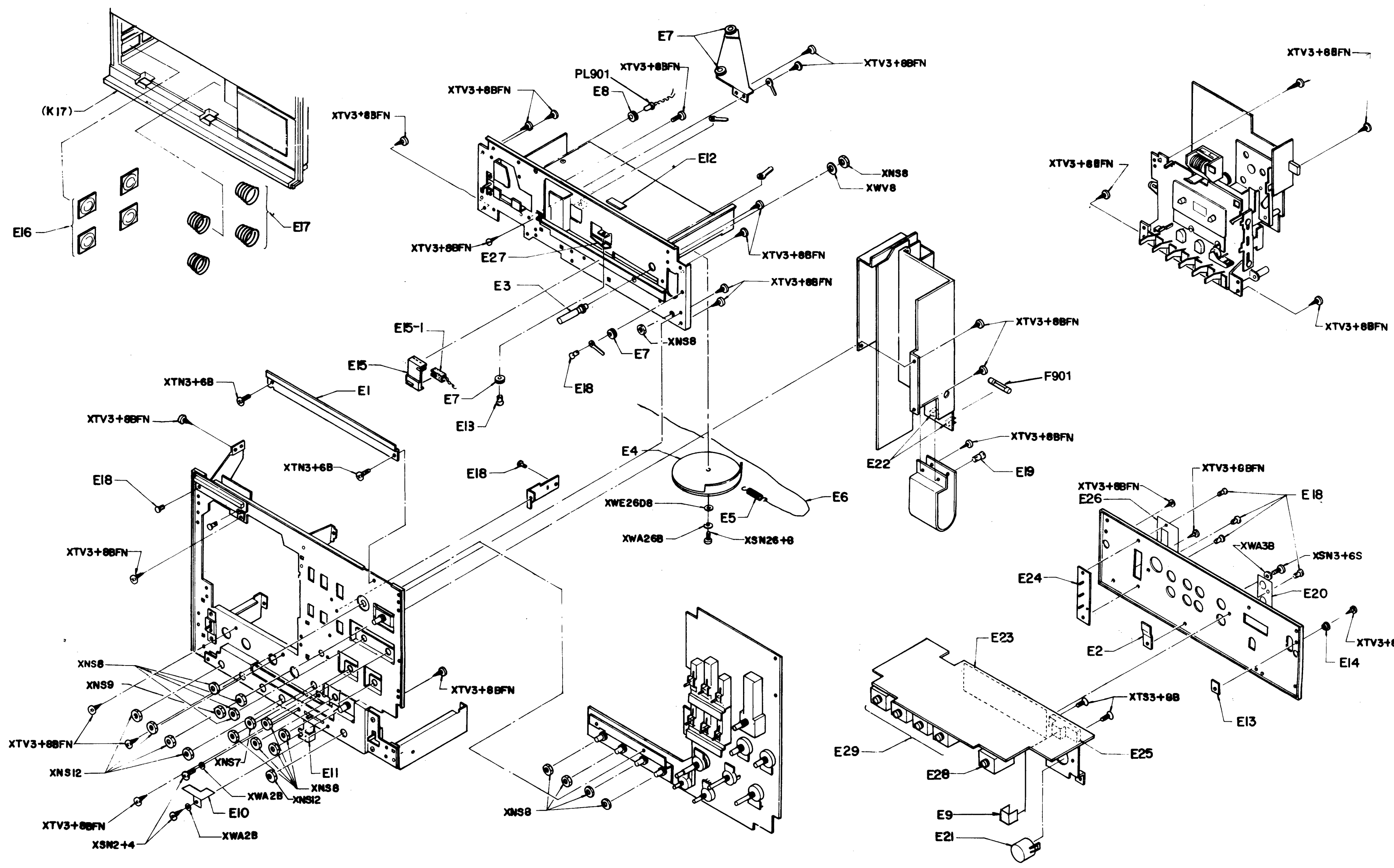

CABINET PARTS

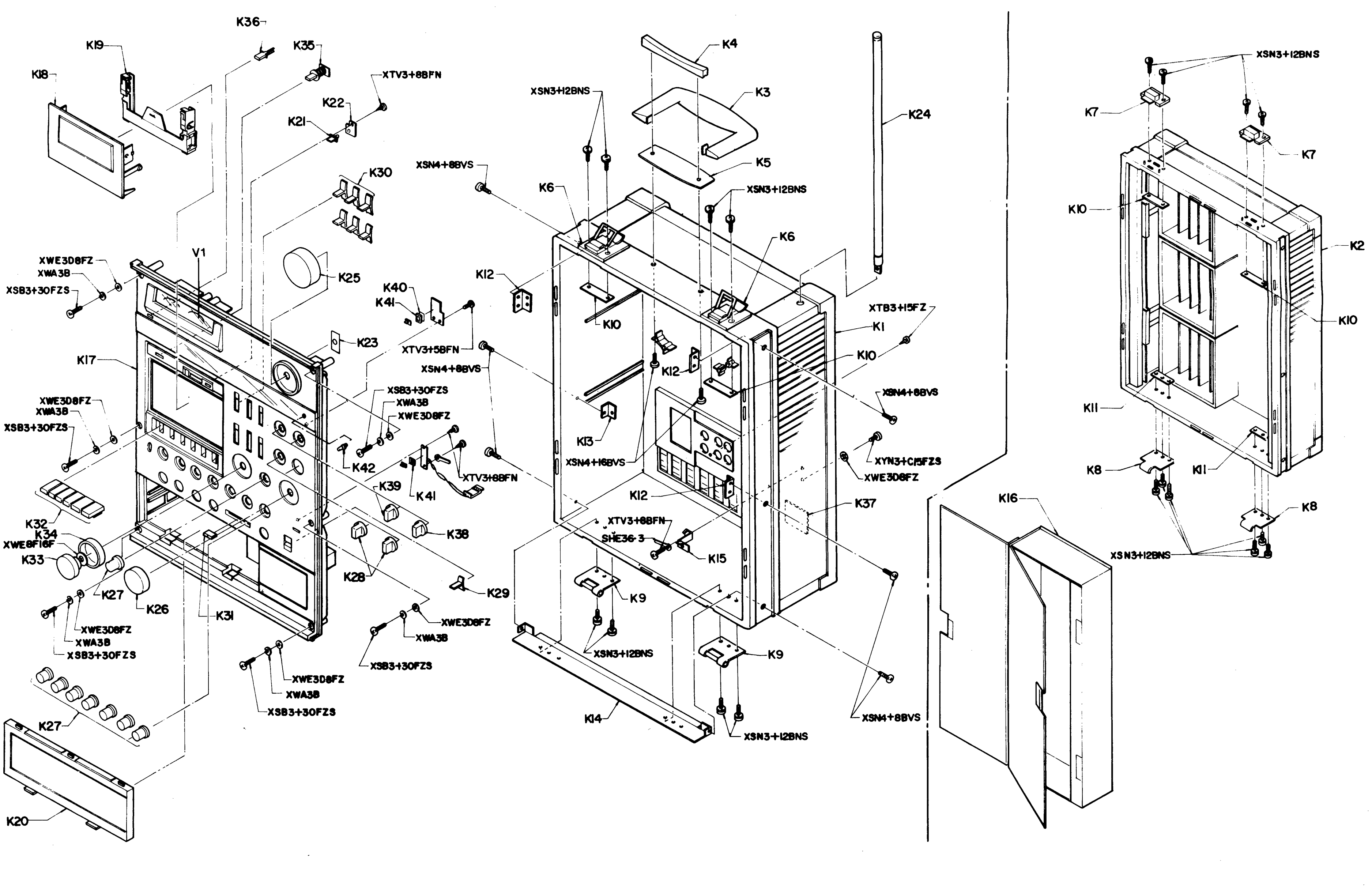

RX-A2S

SCHEMATIC DIAGRAM (AUDIO SECTION)

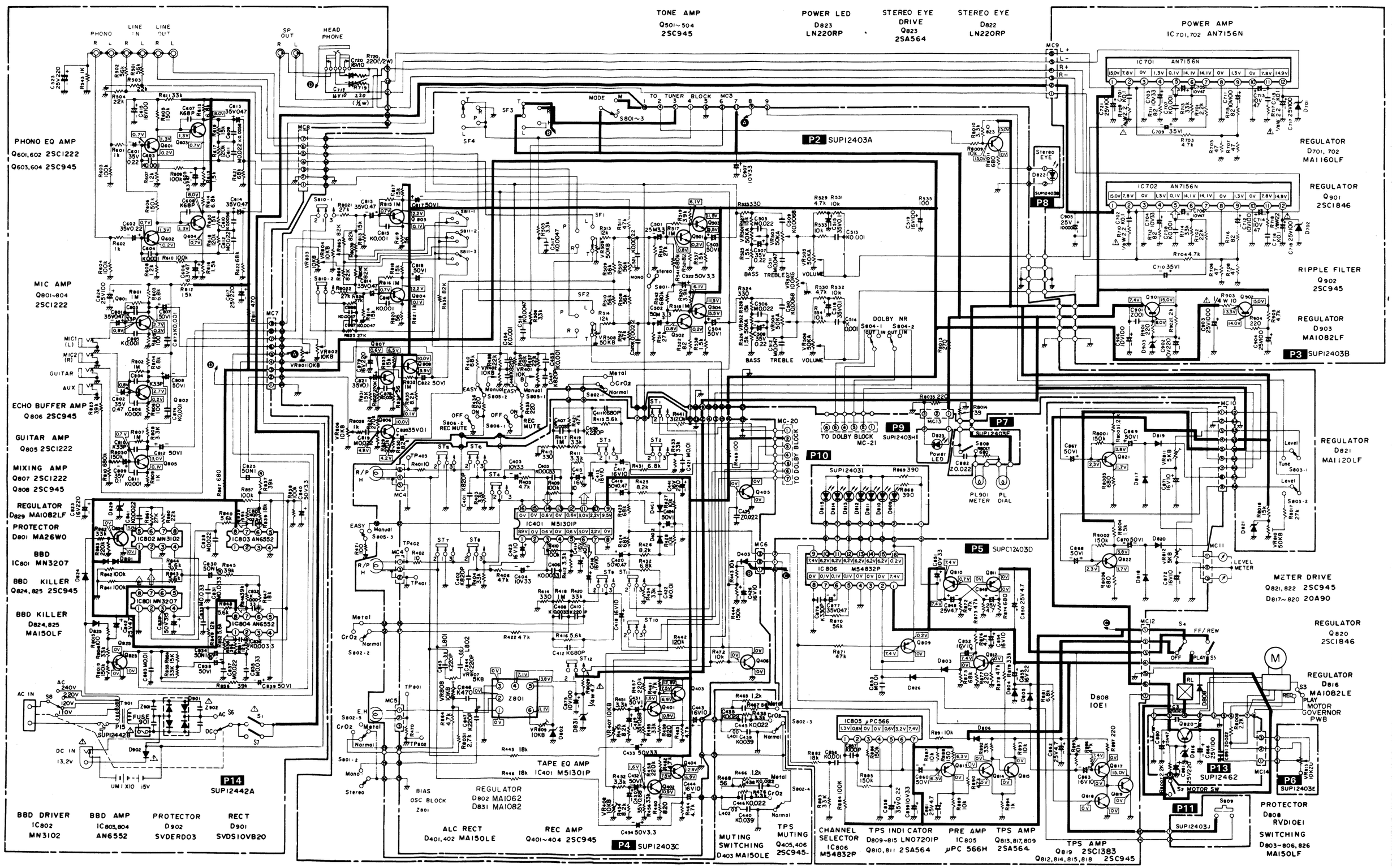

CHEMATIC DIAGRAM (AUDIO SECTION)

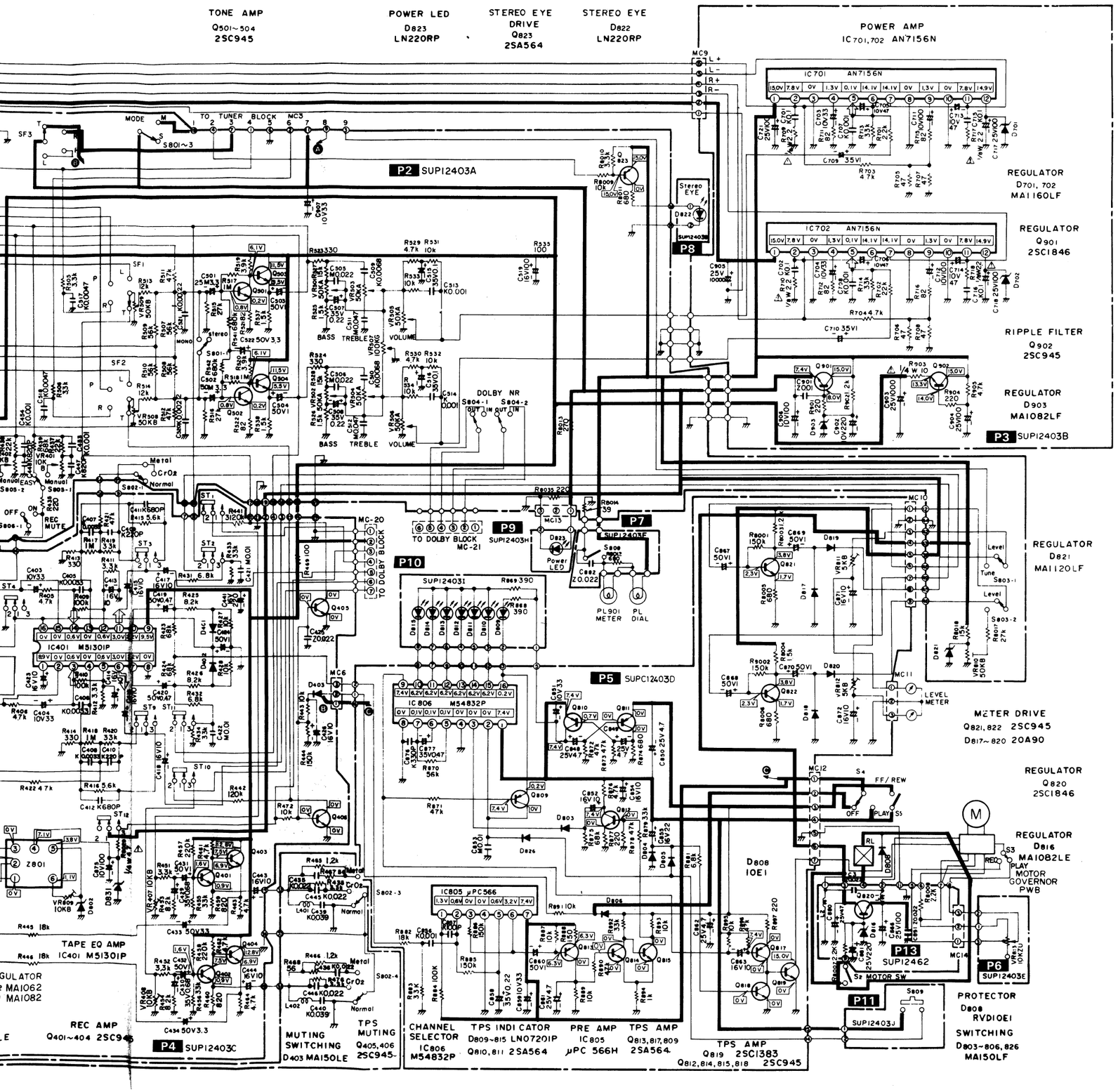

NOTES:

1. SF1~4: FUNCTION SELECTOR SWITCH in "TAPE" position.
2. S1: POWER SWITCH in "OFF" position.
3. S2: MOTOR SWITCH in "OFF" position.
4. S3: REC/PLAY SELECTOR SWITCH in "PLAY" position.
5. S4: MUTING SWITCH in "OFF" position.
6. S5: FF/REW SWITCH in "OFF" position.
7. S6: AC/DC SELECTOR SWITCH in "DC" position.
8. S201-1, 202-2: RADIO BAND SELECTOR SWITCH in "MW" position.
9. S801-1~801-3: MODE/BEAT-PROOF SWITCH in "STEREO" position.
10. S802-1~802-5: TAPE SELECTOR SWITCH in "NORMAL" position.
11. S803-1, 803-2: METER SWITCH in "VU" position.
12. S804-1, 804-2: LOUDNESS SWITCH in "ON" position.
13. S805-1~805-3: REC MODE SWITCH in "EASY MATIC" position.
14. S806-1, 806-2: REC MUTE SWITCH in "OFF" position.
15. S808: DIAL LAMP SWITCH in "OFF" position.
16. S809: TPS PROGRAM SWITCH in "OFF" position.
17. S810-1, 810-2: MIC POSITION SWITCH in "OFF" position.
18. S811-1~811-3: ECHO SELECT SWITCH in "MIC" position.
19. ST1~ST12: REC/PLAY SELECTOR SWITCH in "PLAY" position.
20. DC voltages are to be measured with digital voltmeter under no signal condition in AM or FM position.
21. ⚠ indicates that only parts specified by the manufacturer be used for safety.

▬ shows power source line

IMPORTANCE:

1. When servicing, any speaker leads must not be connected or touched to ground, otherwise power amplifier IC (AN7156N) should be broken.
2. Power amplifier IC (AN7156N) should be replaced for left and right channel together even if only one amplifier IC is defective.

CIRCUIT BOARD AND WIRING CONNECTION (AUDIO S

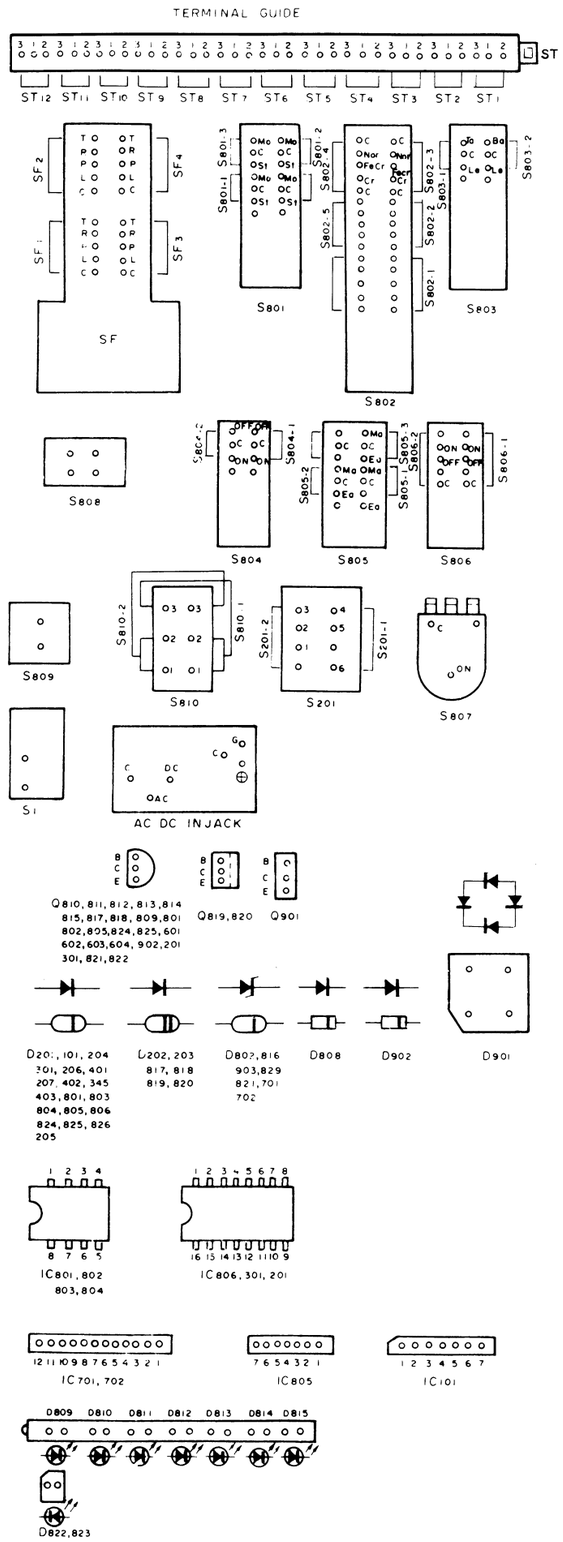

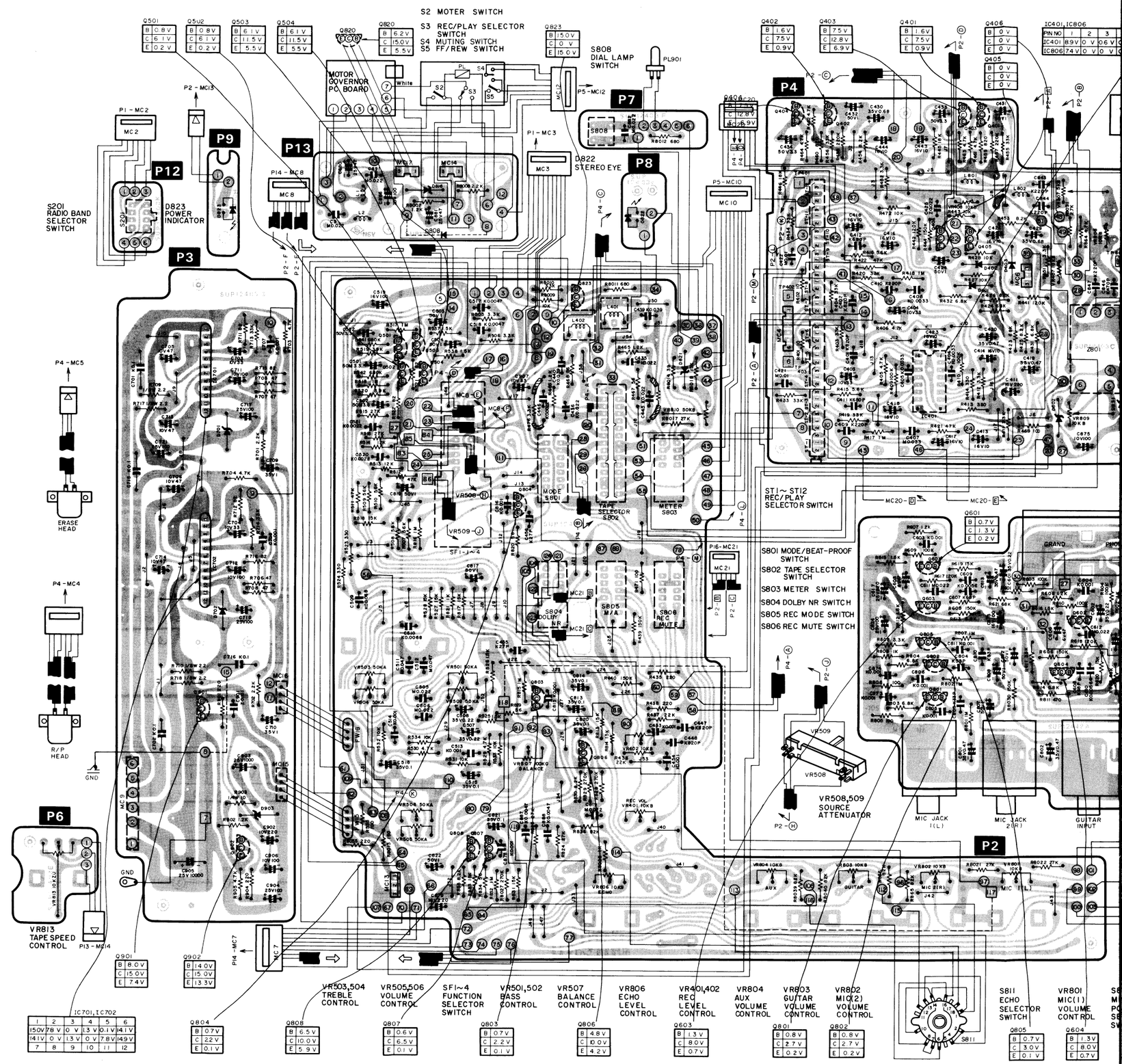

CIRCUIT BOARD AND WIRING CONNECTION (AUDIO SECTION)

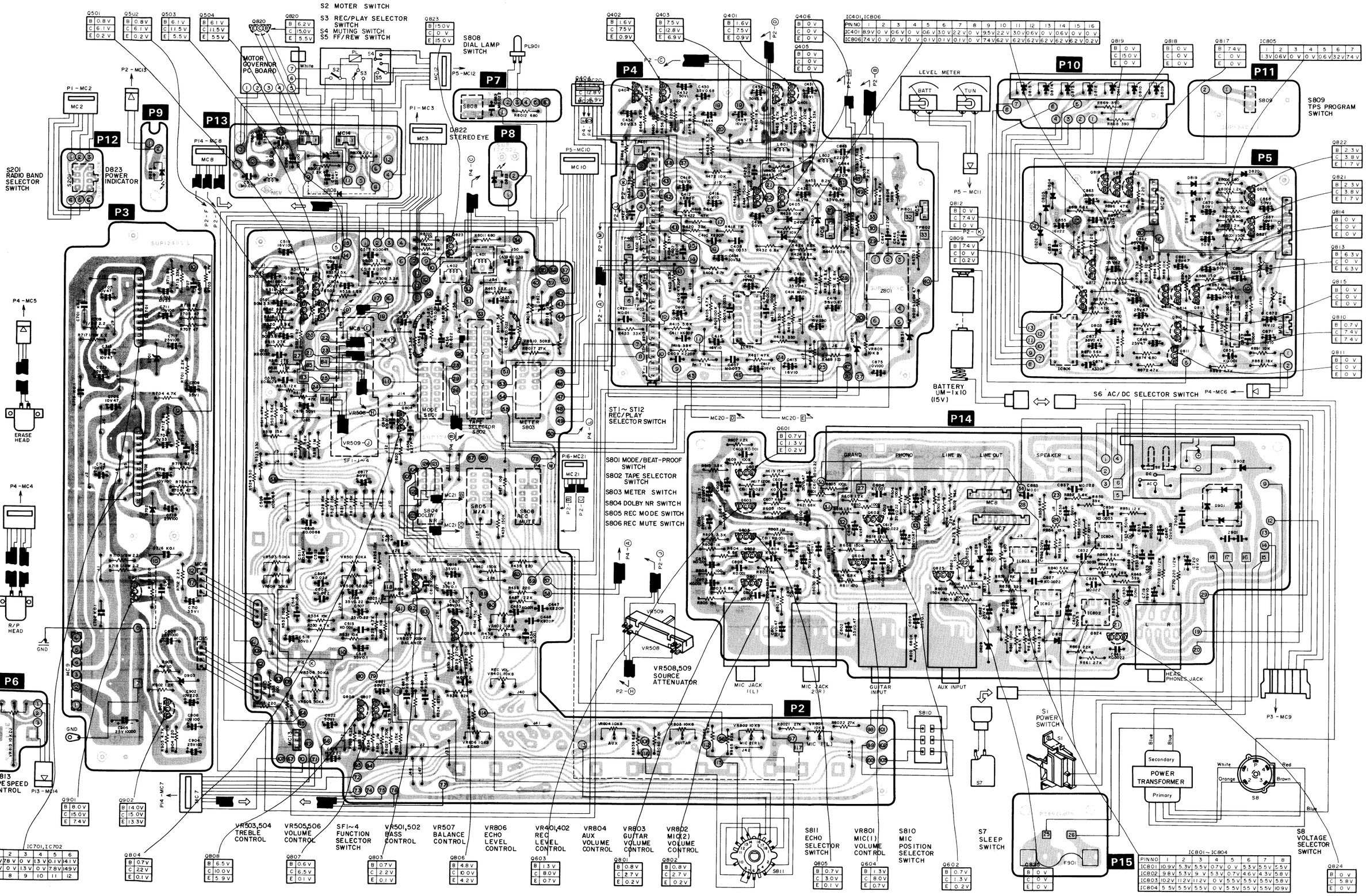

	B	C	E
Q501	0.8V	6.1V	0.2V
Q502	0.8V	6.1V	0.2V
Q503	6.1V	11.5V	5.5V
Q504	6.1V	11.5V	5.5V
Q820	6.2V	15.0V	5.5V
Q823	15.0V	0V	15.0V
Q402	1.6V	7.5V	0.9V
Q403	7.5V	12.8V	6.9V
Q401	1.6V	7.5V	0.9V
Q406	0V	0V	0V
Q405	0V	0V	0V
Q819	0V	15.0V	0V
Q818	0V	0V	0V
Q817	7.4V	0V	0V
Q822	2.3V	3.8V	1.7V
Q821	2.3V	3.8V	1.7V
Q814	0V	0V	0V
Q813	6.3V	0V	6.3V
Q815	0V	0V	0V
Q810	0.7V	7.4V	7.4V
Q811	0V	0V	0V
Q812	0V	7.4V	0V
Q809	7.4V	0V	0.2V
Q601	0.7V	1.3V	0.2V
Q901	8.0V	15.0V	7.4V
Q902	14.0V	15.0V	13.3V
Q804	0.7V	22V	0.1V
Q808	6.5V	10.0V	5.9V
Q807	0.6V	6.5V	0.1V
Q803	0.7V	2.2V	0.1V
Q806	4.8V	10.0V	4.2V
Q603	1.3V	8.0V	0.7V
Q801	0.8V	2.7V	0.2V
Q802	0.8V	2.7V	0.2V
Q805	0.7V	3.0V	0.1V
Q604	1.3V	8.0V	0.7V
Q602	0.7V	1.3V	0.2V
Q826	0V	0V	0V
Q824	0V	5.8V	0V

IC401, IC806

PIN NO	1	2	3	4	5	6	7	8	9	10	11	12	13	14	15	16
IC401	8.9V	0V	0.6V	0V	0.6V	3.0V	1.2V	0V	9.5V	2.2V	3.0V	0.6V	0V	0.6V	0V	0V
IC806	7.4V	0V	0V	0V	0V	0.1V	0.1V	0.1V	0V	7.4V	6.2V	6.2V	6.2V	6.2V	6.2V	0.2V

IC805

1	2	3	4	5	6	7
1.3V	0.6V	0V	0V	0.6V	3.2V	7.4V

IC701, IC702

	1	2	3	4	5	6
	7.6V	0V	1.3V	0V	1.3V	0.1V	14.1V
	0V	1.3V	0V	7.8V	14.9V	
	8	9	10	11	12	

IC801~IC804

PIN NO	1	2	3	4	5	6	7	8
IC801	10.9V	5.3V	5.5V	0.7V	0V	5.3V	5.5V	5.5V
IC802	9.8V	5.3V	9V	5.3V	0.7V	4.6V	4.3V	5.8V
IC803	10.2V	11.2V	11.2V	0V	5.5V	5.5V	5.5V	5.8V
IC804	5.5V	5.5V	5.5V	0V	5.5V	5.5V	5.5V	10.9V

SCHEMATIC DIAGRAM (RADIO SECTION)

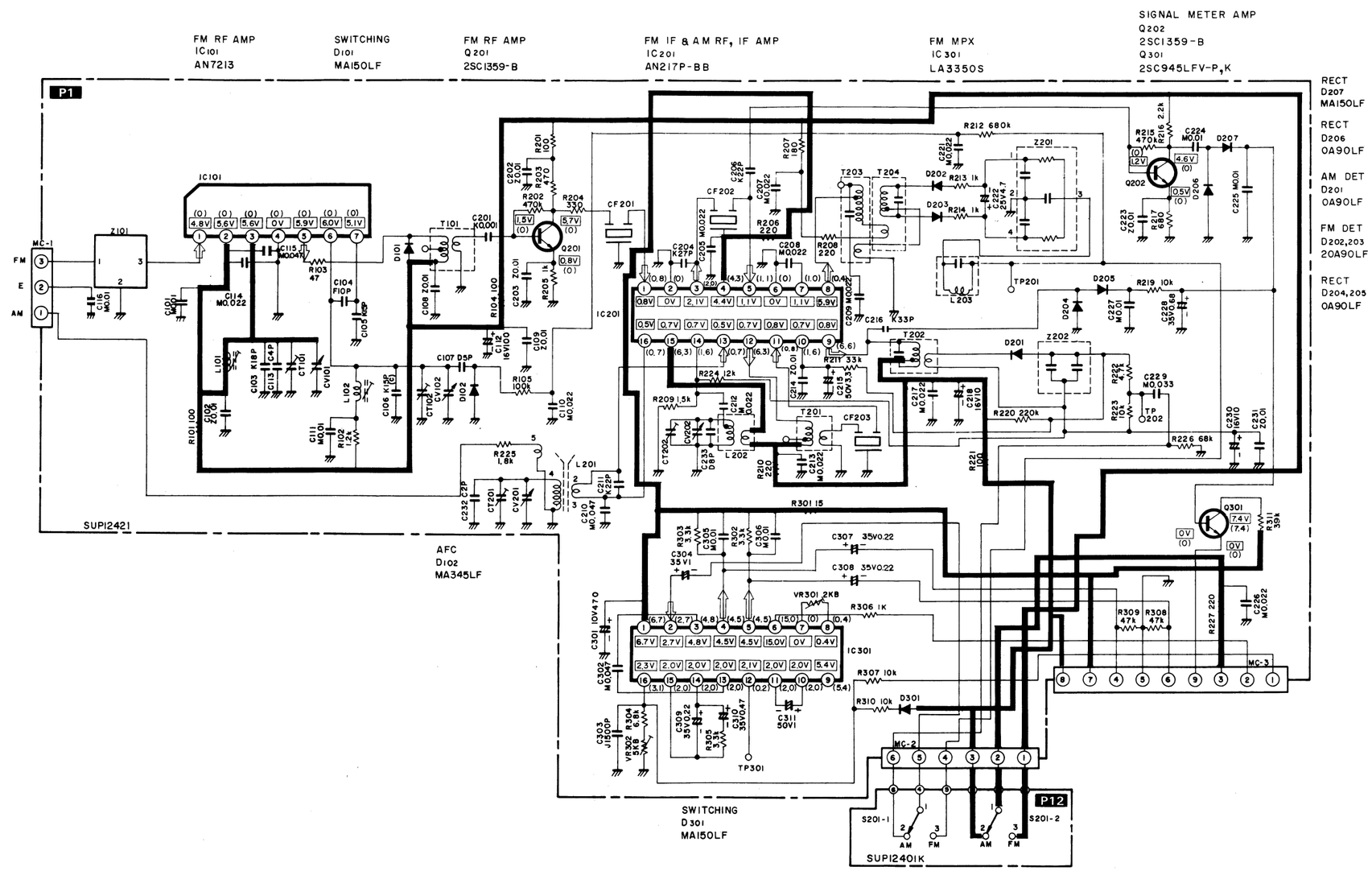

CIRCUIT BOARD AND WIRI

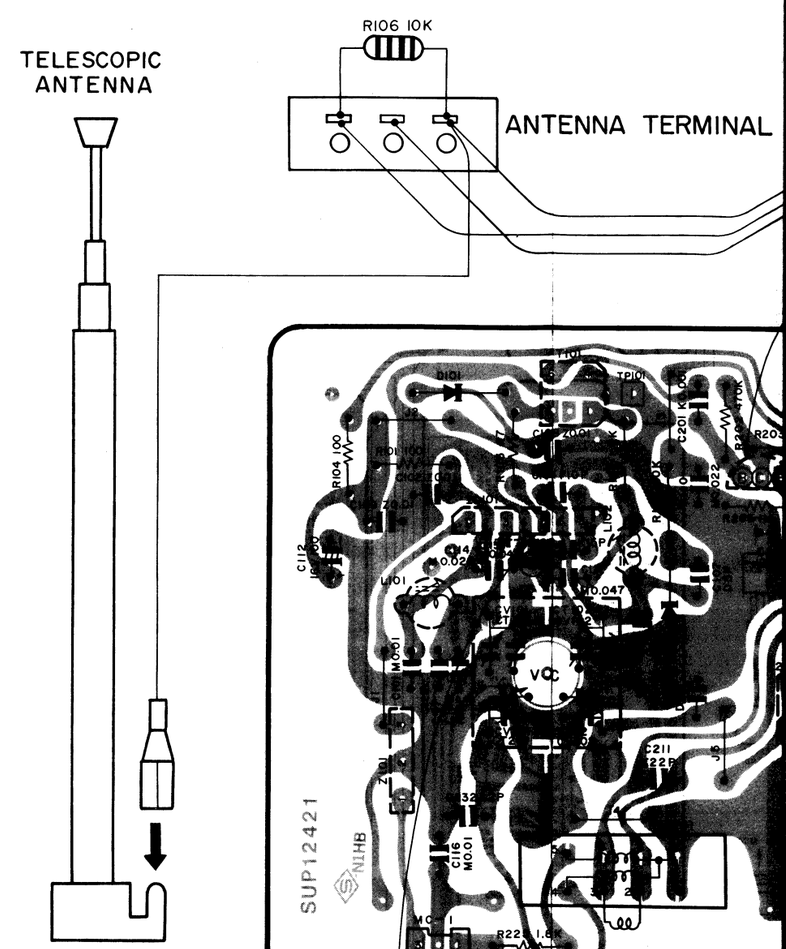

IC101

PIN NO	1	2	3	4	5	6	7
F M	4.8 V	5.6 V	5.6 V	0 V	5.9 V	6.0 V	5.1 V
A M	0 V	0 V	0 V	0 V	0 V	0 V	0 V

IC201,301

	PIN NO	1
IC201	F M	0.8
	A M	0.8
IC301	F M	6.7
	A M	6.7

BOTTOM VIEW

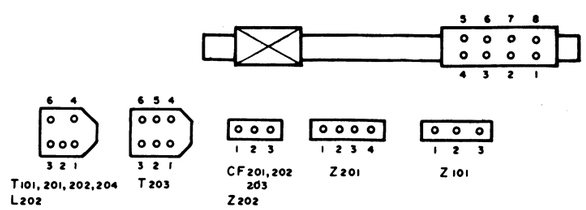

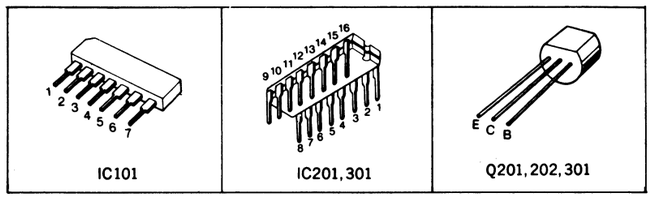

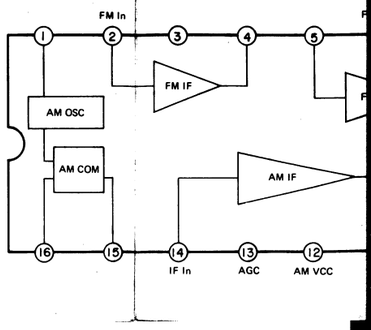

NOTES:

1. S201-1, 201-2: RADIO BAND SELECTOR SWITCH in "AM" position.
2. DC voltage measurements are taken with electronics voltmeter from negative terminal of battery.
   ( ).."AM" position, [ ]..."FM" position.

▬ shows power source line.

RADIO SECTION)

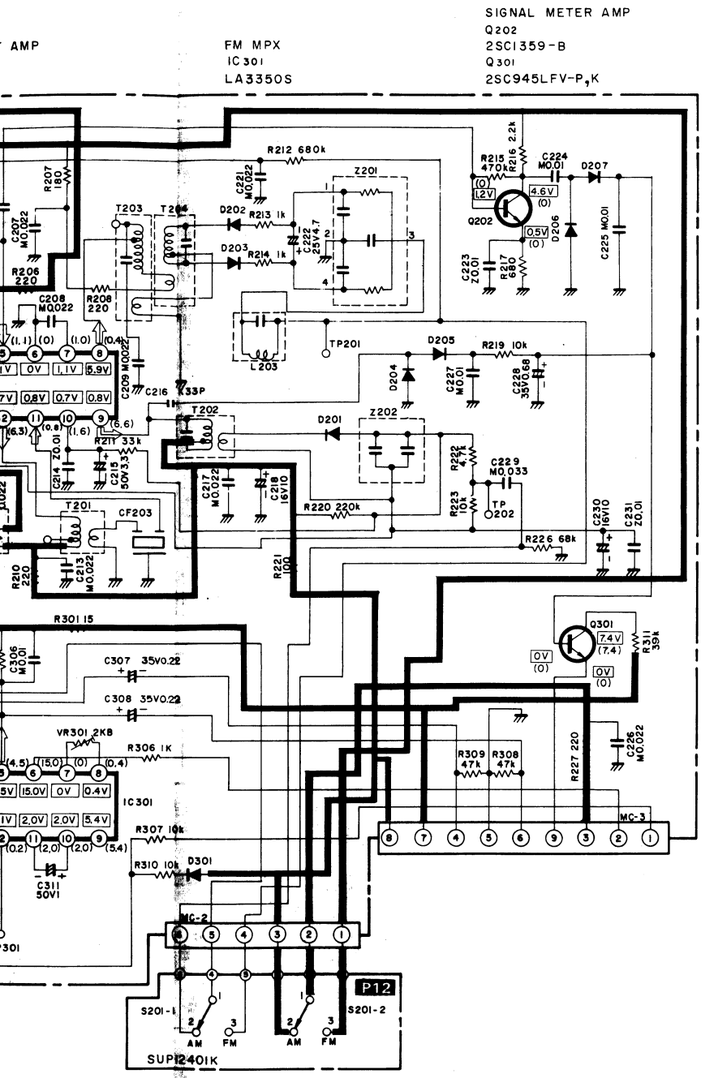

CIRCUIT BOARD AND WIRING CONNECTION (RADIO SECTION)

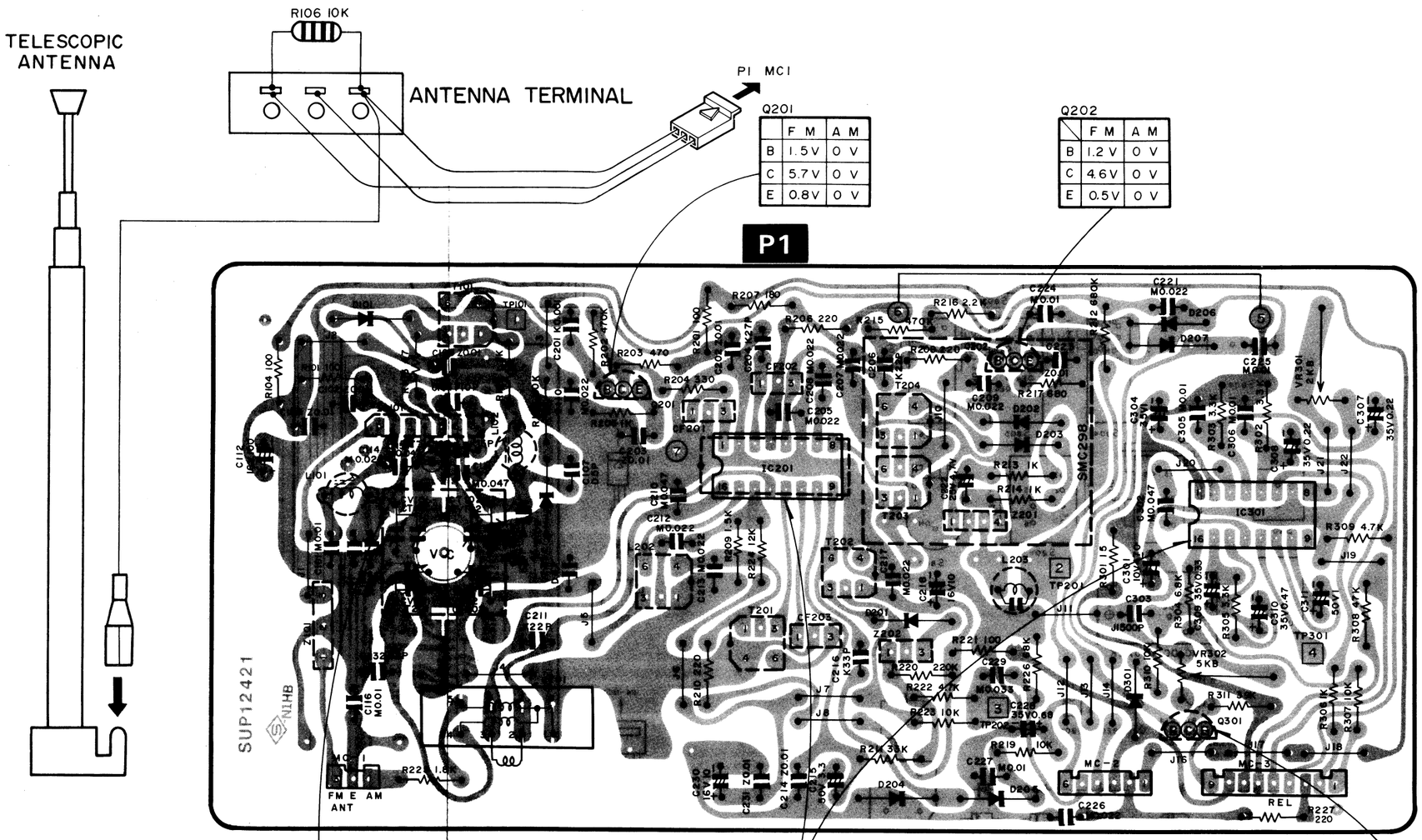

Q201

	FM	AM
B	1.5V	0V
C	5.7V	0V
E	0.8V	0V

Q202

	FM	AM
B	1.2V	0V
C	4.6V	0V
E	0.5V	0V

IC101

PIN NO	1	2	3	4	5	6	7
FM	4.8V	5.6V	5.6V	0V	5.9V	6.0V	5.1V
AM	0V	0V	0V	0V	0V	0V	0V

IC201,301

	PIN NO	1	2	3	4	5	6	7	8	9	10	11	12	13	14	15	16
IC201	FM	0.8V	0V	2.1V	4.4V	1.1V	0V	1.1V	5.9V	0.8V	0.7V	0.8V	0.7V	0.5V	0.7V	0.7V	0.5V
	AM	0.8V	0V	2.0V	4.3V	1.1V	0V	1.0V	0.4V	6.6V	1.6V	0.8V	6.3V	0.7V	1.6V	6.3V	0.7V
IC301	FM	6.7V	2.7V	4.8V	4.5V	4.5V	15.0V	0V	0.4V	5.4V	2.0V	2.0V	2.1V	2.0V	2.0V	2.0V	2.3V
	AM	6.7V	2.7V	4.8V	4.5V	4.5V	15.0V	0V	0.4V	5.4V	2.0V	2.0V	2.0V	2.0V	2.0V	2.0V	3.1V

Q301

	FM	AM
B	0V	0V
C	7.4V	7.4V
E	0V	0V

BOTTOM VIEW

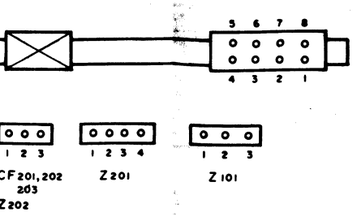

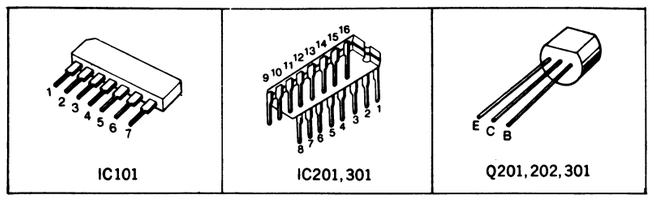

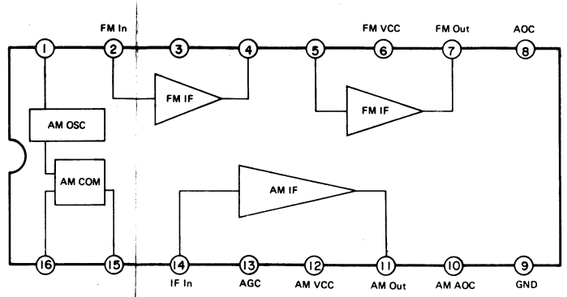

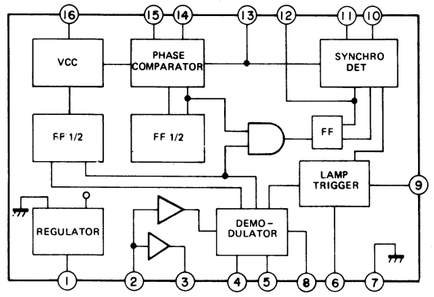

SCHEMATIC DIAGRAM (DOLBY NR SECTION)

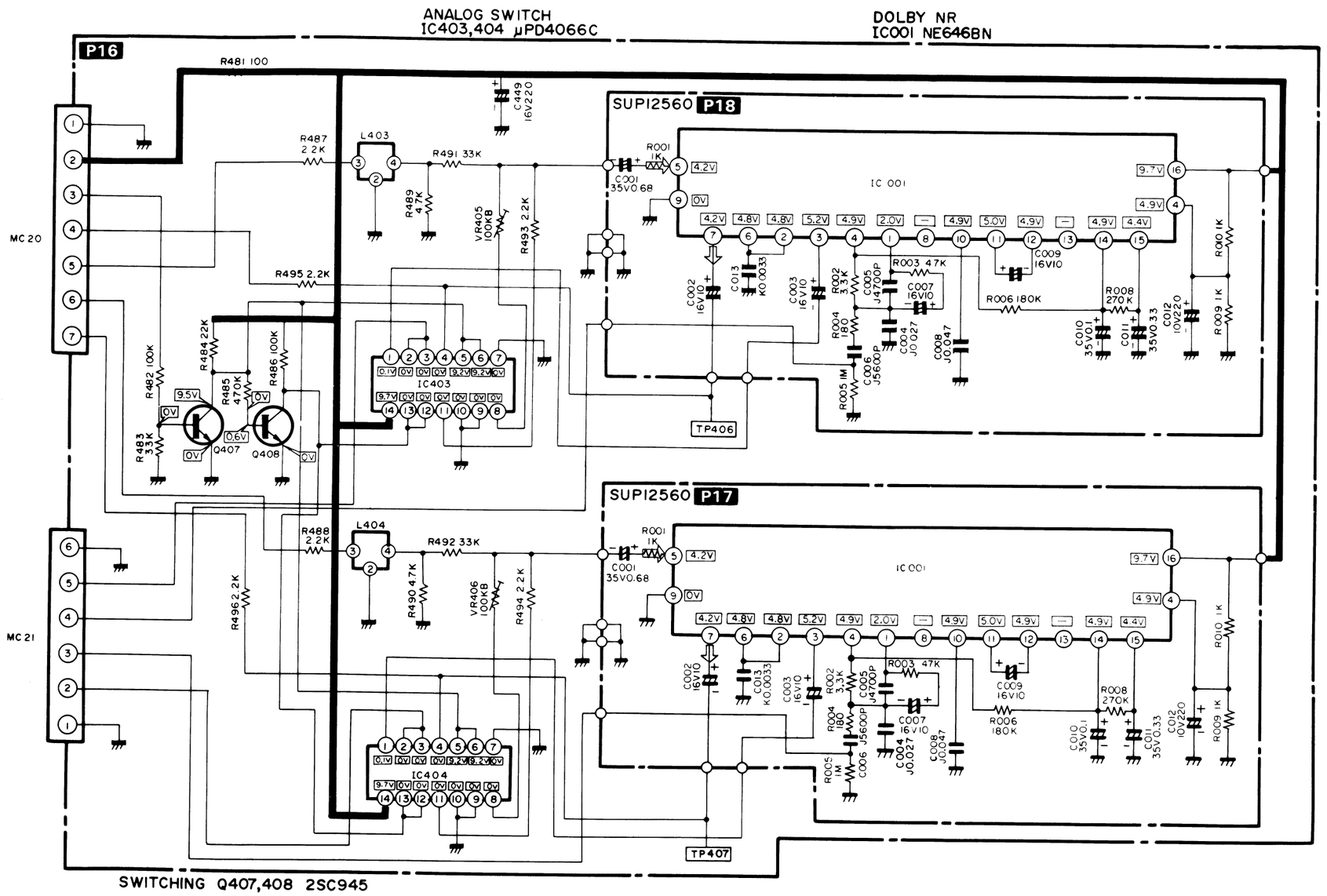

CIRCUIT BOARD AND WIRING

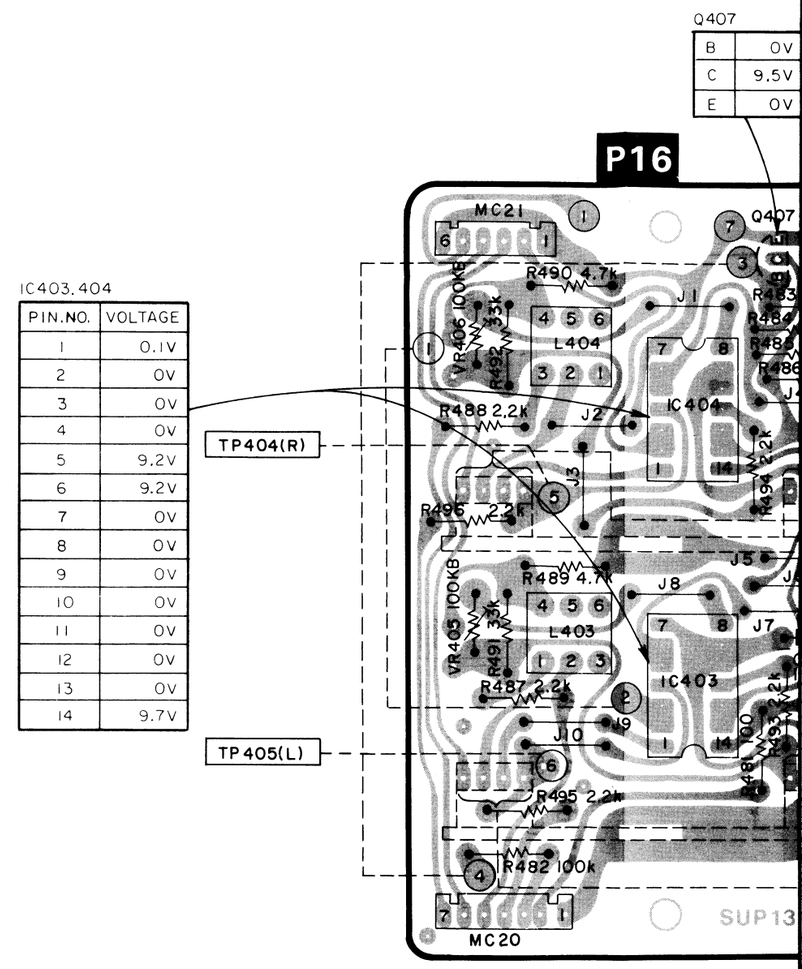

Q407

B	0V
C	9.5V
E	0V

IC403.404

PIN.NO.	VOLTAGE
1	0.1V
2	0V
3	0V
4	0V
5	9.2V
6	9.2V
7	0V
8	0V
9	0V
10	0V
11	0V
12	0V
13	0V
14	9.7V

OLBY NR SECTION)

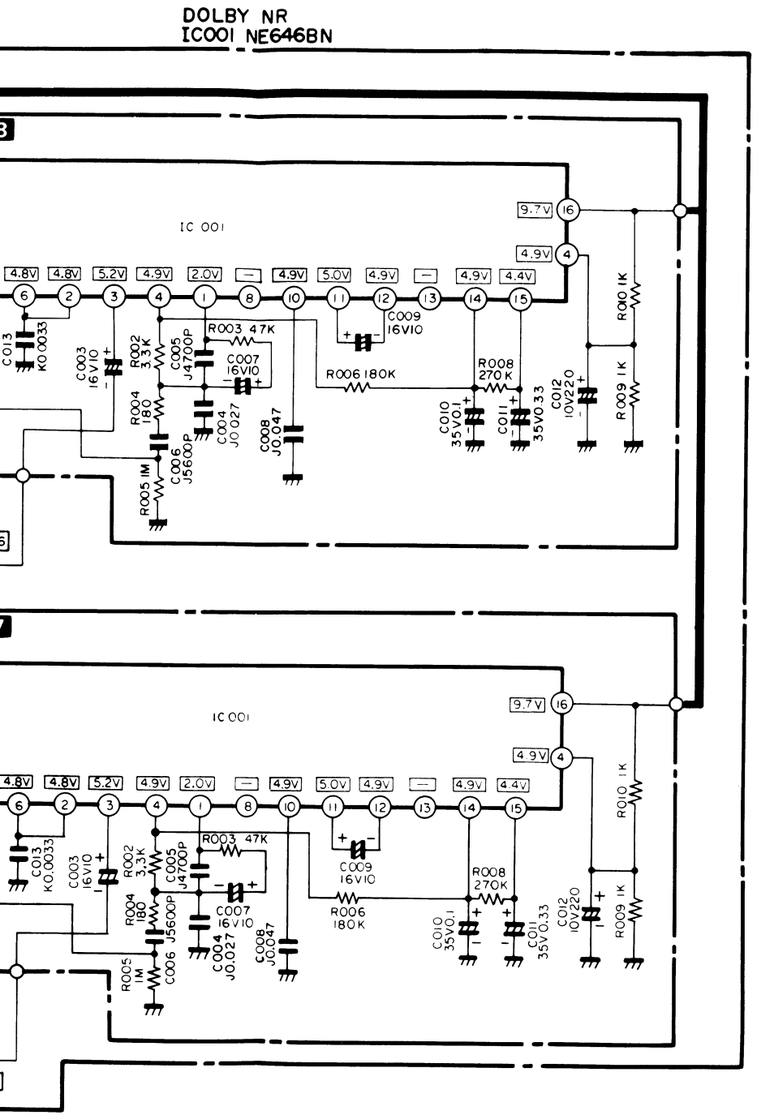

CIRCUIT BOARD AND WIRING CONNECTION (DOLBY NR SECTION)

Q407	
B	0V
C	9.5V
E	0V

Q408	
B	0.6V
C	0V
E	0V

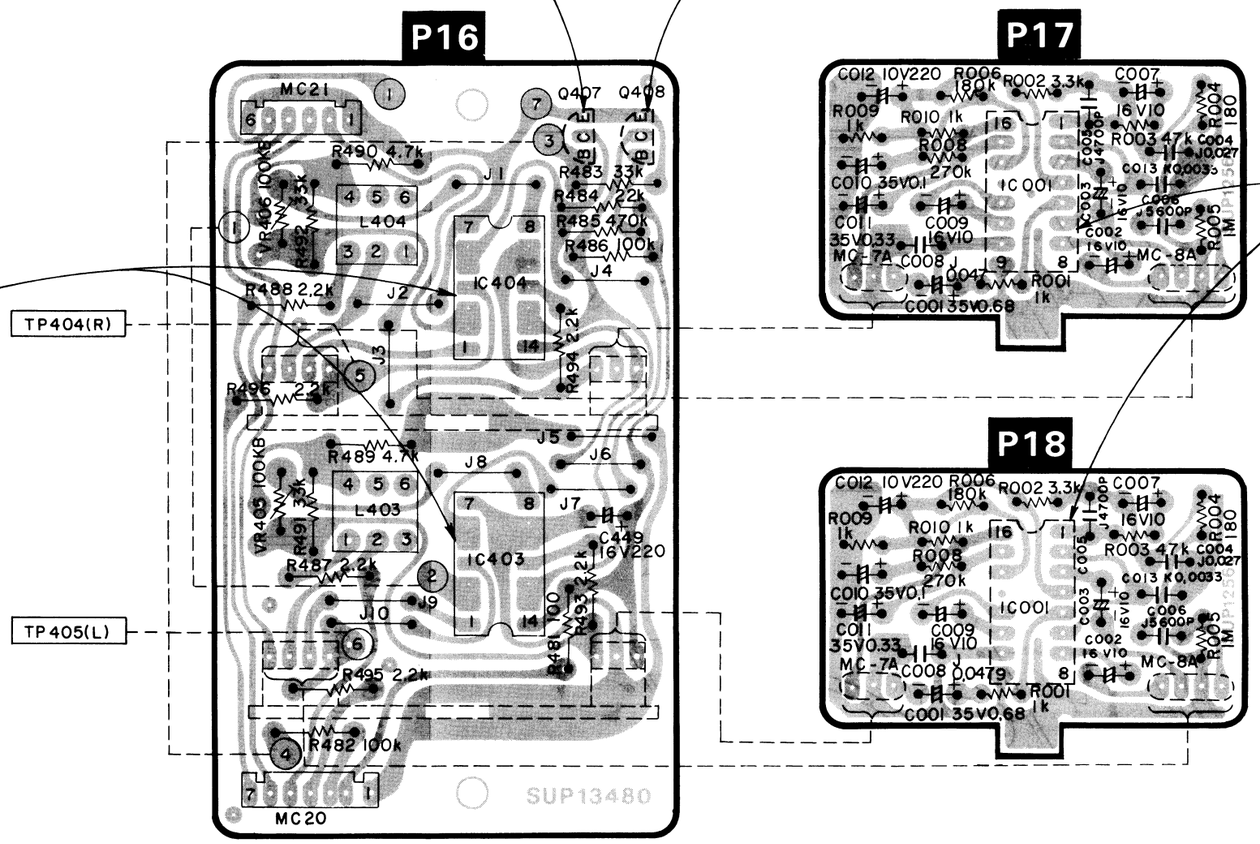

IC403, 404

PIN.NO.	VOLTAGE
1	0.1V
2	0V
3	0V
4	0V
5	9.2V
6	9.2V
7	0V
8	0V
9	0V
10	0V
11	0V
12	0V
13	0V
14	9.7V

IC001

PIN.NO.	VOLTAGE
1	2.0V
2	4.8V
3	5.2V
4	4.9V
5	4.2V
6	4.8V
7	4.2V
8	—
9	0V
10	4.9V
11	5.0V
12	4.9V
13	—
14	4.9V
15	4.4V
16	9.7V

CABINET PARTS

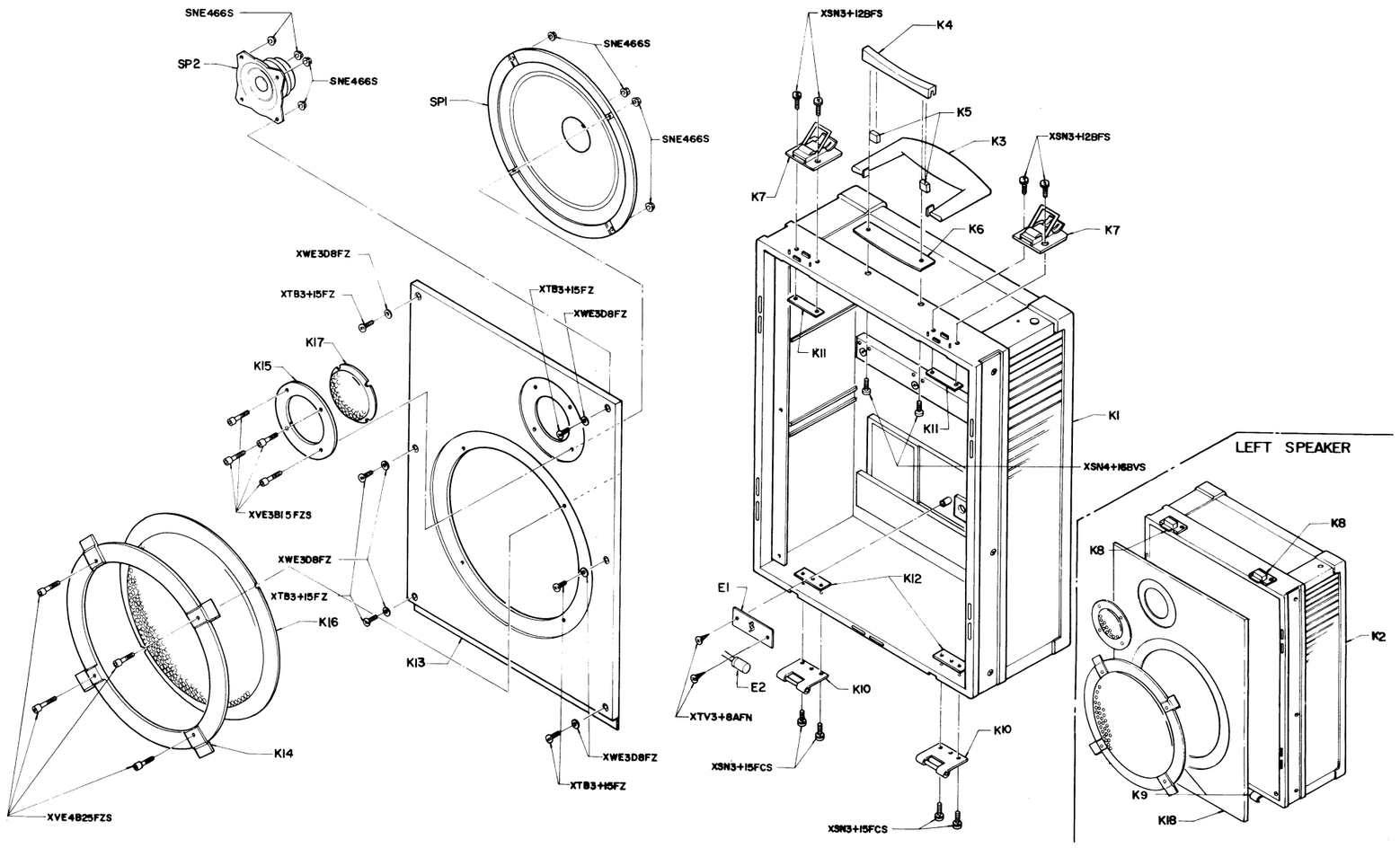

■REPLACEMENT PARTS LIST .....Model RX-A2S
(RD8009-5138C)

NOTES: 1. ⚠ indicates that only parts specified by the manufacturer be used for safety.
2. The S mark indicates service standard parts and may differ from production parts.

Ref. No.	Part No.	Part Name & Description	Per Set	Remarks
		MECHANICAL PARTS (SJD5708B)		
M1	SMQ1908	Screw, Motor	3	
M2	SMQ1834	Rubber Cushion, Motor	3	
M3	SMQ2836	Belt, Main	1	
M4	SXE152-1	Eject Arm Ass'y	1	
M5	SMQ2426-1	Operation Plate, Muting w/Spring	1	
M6	SMQ1930-1	RF Clutch Ass'y w/Spring	1	
M7	SMQ1922	FF Idler Arm Ass'y w/Spring	1	
M8	SMQ2840	Idler Wheel w/Washer	1	
M9	SMQ2842	Gear FF w/Washer	1	
M10	SMQ1952	Washer	2	
M11	SMQ1928	Arm, Rewind	1	
M12	SMQ2428	Main Plate w/Spring	1	
M13	SMQ2788	Rec Slide Lever w/Spring	1	
M14	SMQ1378	Leaf Switch, Motor ON-OFF	1	
M15	SMQ2432	Tape Holder Ass'y w/Spring	1	
M16	SMQ2434	Slider Lever, Play	1	
M17	SMQ2804	Spring, Pressure Roller	1	
M18	SMQ1426	Collar, Play Slide Lever	1	
M19	SMQ2790-1	Pulley, Drive	1	
M20	SMQ2794	Flywheel	1	
M21	SMQ1948	Spring, Thrust	1	
M22	SMQ1784	Spring, Flywheel	1	
M23	SMQ2796	Pad, Flywheel	1	
M24	SMQ1426	Collar, Eject Slide Lever	2	
M25	SMQ2444	Lever, Pause	1	
M26	SMQ2834	Collar, Pause Lever	1	
M27	SMQ2448	Spring, Pause Lever	1	
M28	SMQ2450	Washer, Nylon	1	
M29	SMQ2452	Lever, Auto Stop Drive w/Spring	1	
M30	SMQ2454	Collar, Auto Stop Lever	1	
M31	SMQ2462	Eject Slide Lever Ass'y w/Spring	1	
M32	SMQ2464	Rec Safety Lever w/Spring	1	
M33	SMQ1706	Stopper, Rec Safety Lever	1	
M34	SGE932-1	Blind Plate, Cassette	1	
M35	SDH200	Reflactor Paper	1	
M36	SMQ2468	Spring, Button	6	
M37	SMQ2470	Brake Arm Ass'y	1	
M38	SMQ2472	Spring, Brake Arm	1	
M39	SMQ2474	Reel Ass'y, Supply	1	
M40	SMQ2476	Reel Ass'y, Takeup	1	
M41	SMQ2478	Spring, Head Panel	2	
M42	SMQ1648	Collar, Head Panel	1	
M43	SMQ3284	Head Base	1	
M44	SJH62	Erase Head	1	
M45	SJH60	R/P Head	1	
M46	SMQ678	Spring, R/P Head	2	
M47	SMQ2802	Pressure Roller Ass'y	1	
M48	SMQ2494	Lever, Arm	1	
M49	SMQ2488	Spring, RC	1	
M50	SMQ2070	Leaf Switch, Muting	1	
M51	SMQ2798-1	Pause Slide Lever Ass'y w/Spring	1	
M52	SMQ2800	Frame Ass'y, Button	1	
M53	SMQ2792	Belt, Counter	1	
M54	SMQ1662	Pulley, Motor	1	
M55	MHI5C6HW-A	Motor	1	
M56	SUS306	Spring, Eject Arm	1	
M57	SBC426	Button, Cassette	6	
M58	SMQ2750	Counter	1	
M59	SMQ2724	Spring Plate, RF Clutch	1	
M60	SMQ1698	FF, Rew Switch	1	
M61	SMQ2498-1	Operation Plate, FF; Rew w/Spring	1	
M62	SMQ2500	Lever, RC	1	
M63	SMQ2806	RC Slide Lever w/Spring	1	
M64	SMQ2504	Stopper	1	
M65	SMQ2506	Collar Stopper	1	
M66	SMQ2820	Solenoid Ass'y	1	
M67	SMQ2512	Spring, Supply Reel	1	
M68	SMQ1664	Switch, Rec	1	
M69	SMQ2808-1	Spring Plate, Rec	1	
M70	SMQ2810	Switch, Micro	1	
M71	SMQ2812	Lead Pulley Arm Ass'y w/Spring	1	
M72	SMQ2814-1	Full Auto-Stop Plate Ass'y	1	
M73	SMQ3120	Clutch Plate	1	
M74	SMQ2818	Solenoid Bracket Ass'y	1	
M75	SMQ2822	Spacer, Solenoid	1	
M76	SMQ2824-1	Cut Lever, RC	1	
M77	SMQ2826	Spring, RC Cut Lever	1	
M78	SMQ2838	Stopper, Full Auto-Stop Plate	1	
M79	SMQ3216	Spring, Auto Stop Plate	1	
M80	SMQ3286	Collar, Erase Head	1	
		TRANSISTORS AND DIODES		
Q201, 202	2SC1359-B	Transistor	2	S
Q301, 401, 402, 403, 404, 405, 406, 407, 408, 501, 502, 503, 504	2SC945L	Transistor	12	S
Q601, 602	2SC1222	Transistor	2	S
Q603, 604	2SC945L	Transistor	2	S
Q801, 802, 803, 804, 805	2SC1222	Transistor	5	S
Q806	2SC945L	Transistor	1	S
Q807	2SC1222	Transistor	1	S
Q808	2SC945L	Transistor	1	S
Q809, 810	2SA666AI-R	Transistor	2	S
Q811, 813	2SA666AI-R	Transistor	2	S
Q812	2SC945L	Transistor	1	S
Q814, 815	2SC945L	Transistor	2	S
Q817	2SA666AI-R	Transistor	1	S
Q818	2SC945L	Transistor	1	S
Q819	2SC1384A-Q	Transistor	1	S
Q820	2SC1846	Transistor	1	S
Q821, 822	2SC945L	Transistor	2	S
Q823	2SA666AI-R	Transistor	1	S
Q824, 825	2SC945L	Transistor	2	S

Ref. No.	Part No.	Part Name & Description	Per Set	Remarks
Q901	2SC1846	Transistor	1	S
Q902	2SC945L	Transistor	1	S
D101	MA162A	Diode	1	S
D102	MA345	Diode	1	
D201	20A90	Diode	1	S
D202, 203	20A90	Diode	2	S

Ref. No.	Part No.	Part Name & Description	Per Set	Remarks
T101	RLI4M101	1st IFT, FM	1	
T201	RLI2M210	1st IFT, AM	1	
T202	SLI2M202-M	2nd IFT, AM	1	
T203	RLI4M501	IFT, FM Disc	1	
T204	RLI4M502	IFT, FM Disc	1	
T901	SLT5M146-V	Power Transformer	1	⚠

RX-A2S RX-A2S

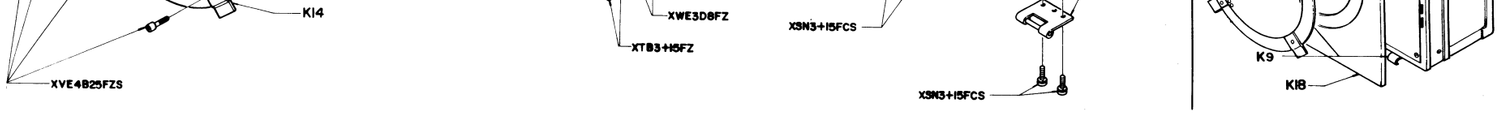

■ REPLACEMENT PARTS LIST .....Model RX-A2S
(RD8009-5138C)

NOTES: 1. ⚠ indicates that only parts specified by the manufacturer be used for safety.
2. The S mark indicates service standard parts and may differ from production parts.

Ref. No.	Part No.	Part Name & Description	Per Set	Remarks
		MECHANICAL PARTS (SJD5708B)		
M1	SMQ1908	Screw, Motor	3	
M2	SMQ1834	Rubber Cushion, Motor	3	
M3	SMQ2836	Belt, Main	1	
M4	SXE152-1	Eject Arm Ass'y	1	
M5	SMQ2426-1	Operation Plate, Muting w/Spring	1	
M6	SMQ1930-1	RF Clutch Ass'y w/Spring	1	
M7	SMQ1922	FF Idler Arm Ass'y w/Spring	1	
M8	SMQ2840	Idler Wheel w/Washer	1	
M9	SMQ2842	Gear FF w/Washer	1	
M10	SMQ1952	Washer	2	
M11	SMQ1928	Arm, Rewind	1	
M12	SMQ2428	Main Plate w/Spring	1	
M13	SMQ2788	Rec Slide Lever w/Spring	1	
M14	SMQ1378	Leaf Switch, Motor ON-OFF	1	
M15	SMQ2432	Tape Holder Ass'y w/Spring	1	
M16	SMQ2434	Slider Lever, Play	1	
M17	SMQ2804	Spring, Pressure Roller	1	
M18	SMQ1426	Collar, Play Slide Lever	1	
M19	SMQ2790-1	Pulley, Drive	1	
M20	SMQ2794	Flywheel	1	
M21	SMQ1948	Spring, Thrust	1	
M22	SMQ1784	Spring, Flywheel	1	
M23	SMQ2796	Pad, Flywheel	1	
M24	SMQ1426	Collar, Eject Slide Lever	2	
M25	SMQ2444	Lever, Pause	1	
M26	SMQ2834	Collar, Pause Lever	1	
M27	SMQ2448	Spring, Pause Lever	1	
M28	SMQ2450	Washer, Nylon	1	
M29	SMQ2452	Lever, Auto Stop Drive w/Spring	1	
M30	SMQ2454	Collar, Auto Stop Lever	1	
M31	SMQ2462	Eject Slide Lever Ass'y w/Spring	1	
M32	SMQ2464	Rec Safety Lever w/Spring	1	
M33	SMQ1706	Stopper, Rec Safety Lever	1	
M34	SGE932-1	Blind Plate, Cassette	1	
M35	SDH200	Reflactor Paper	1	
M36	SMQ2468	Spring, Button	6	
M37	SMQ2470	Brake Arm Ass'y	1	
M38	SMQ2472	Spring, Brake Arm	1	
M39	SMQ2474	Reel Ass'y, Supply	1	
M40	SMQ2476	Reel Ass'y, Takeup	1	
M41	SMQ2478	Spring, Head Panel	2	
M42	SMQ1648	Collar, Head Panel	1	
M43	SMQ3284	Head Base	1	
M44	SJH62	Erase Head	1	
M45	SJH60	R/P Head	1	
M46	SMQ678	Spring, R/P Head	2	
M47	SMQ2802	Pressure Roller Ass'y	1	
M48	SMQ2494	Lever, Arm	1	
M49	SMQ2488	Spring, RC	1	
M50	SMQ2070	Leaf Switch, Muting	1	
M51	SMQ2798-1	Pause Slide Lever Ass'y w/Spring	1	
M52	SMQ2800	Frame Ass'y, Button	1	
M53	SMQ2792	Belt, Counter	1	
M54	SMQ1662	Pulley, Motor	1	
M55	MHI5C6HW-A	Motor	1	
M56	SUS306	Spring, Eject Arm	1	
M57	SBC426	Button, Cassette	6	
M58	SMQ2750	Counter	1	
M59	SMQ2724	Spring Plate, RF Clutch	1	
M60	SMQ1698	FF, Rew Switch	1	
M61	SMQ2498-1	Operation Plate, FF; Rew w/Spring	1	
M62	SMQ2500	Lever, RC	1	
M63	SMQ2806	RC Slide Lever w/Spring	1	
M64	SMQ2504	Stopper	1	
M65	SMQ2506	Collar Stopper	1	
M66	SMQ2820	Solenoid Ass'y	1	
M67	SMQ2512	Spring, Supply Reel	1	
M68	SMQ1664	Switch, Rec	1	
M69	SMQ2808-1	Spring Plate, Rec	1	
M70	SMQ2810	Switch, Micro	1	
M71	SMQ2812	Lead Pulley Arm Ass'y w/Spring	1	
M72	SMQ2814-1	Full Auto-Stop Plate Ass'y	1	
M73	SMQ3120	Clutch Plate	1	
M74	SMQ2818	Solenoid Bracket Ass'y	1	
M75	SMQ2822	Spacer, Solenoid	1	
M76	SMQ2824-1	Cut Lever, RC	1	
M77	SMQ2826	Spring, RC Cut Lever	1	
M78	SMQ2838	Stopper, Full Auto-Stop Plate	1	
M79	SMQ3216	Spring, Auto Stop Plate	1	
M80	SMQ3286	Collar, Erase Head	1	
		TRANSISTORS AND DIODES		
Q201, 202	2SC1359-B	Transistor	2	S
Q301, 401, 402, 403, 404, 405, 406, 407, 408, 501, 502, 503, 504				
	2SC945L	Transistor	12	S
Q601, 602	2SC1222	Transistor	2	S
Q603, 604	2SC945L	Transistor	2	S
Q801, 802, 803, 804, 805				
	2SC1222	Transistor	5	S
Q806	2SC945L	Transistor	1	S
Q807	2SC1222	Transistor	1	S
Q808	2SC945L	Transistor	1	S
Q809, 810	2SA666AI-R	Transistor	2	S
Q811, 813	2SA666AI-R	Transistor	2	S
Q812	2SC945L	Transistor	1	S
Q814, 815	2SC945L	Transistor	2	S
Q817	2SA666AI-R	Transistor	1	S
Q818	2SC945L	Transistor	1	S
Q819	2SC1384A-Q	Transistor	1	S
Q820	2SC1846	Transistor	1	S
Q821, 822	2SC945L	Transistor	2	S
Q823	2SA666AI-R	Transistor	1	S
Q824, 825	2SC945L	Transistor	2	S

Ref. No.	Part No.	Part Name & Description	Per Set	Remarks
Q901	2SC1846	Transistor	1	S
Q902	2SC945L	Transistor	1	S
D101	MA162A	Diode	1	S
D102	MA345	Diode	1	
D201	20A90	Diode	1	S
D202, 203	20A90	Diode	2	S
D204, 205	20A90	Diode	2	S
D206	20A90	Diode	1	S
D207	MA162A	Diode	1	S
D301	MA162A	Diode	1	S
D401, 402	MA162A	Diode	2	S
D403	MA162A	Diode	1	S
D701, 702	SVDRD16EB	Diode	2	S
D801	MA26W0	Diode	1	
D802	RVDRD6R2EB	Diode	1	S
D803, 804	MA162A	Diode	2	S
D805, 806	MA162A	Diode	2	S
D808	RVD10E1	Diode	1	S
D809, 810, 812, 813, 814, 815				
	LN07201P	Diode	1	S
D816	SVDRD8.2EB	Diode	1	S
D817, 818	20A90	Diode	2	S
D819, 820	20A90	Diode	2	S
D821	RVDRD12FB	Diode	1	S
D822, 823	LN220RP	Diode	2	
D824, 825	MA162A	Diode	2	S
D826	MA162A	Diode	1	S
D829	SVDRD8.2EB	Diode	1	
D830	SVDRD8.2EB	Diode	1	
D901	SVDS10VB20	Diode	1	⚠
D902	SVDERD03	Diode	1	⚠
D903	SVDRD8.2EB	Diode	1	S ⚠
		INTEGRATED CIRCUITS		
IC001	NE646BN	Dolby NR	2	
IC101	AN7213	FM RF Amp	1	
IC201	AN217P	FM IF & AM RF, IF Amp	1	S
IC301	LA3350S	FM, MPX	1	
IC401	M51301P	Tape EQ Amp	1	
IC403, 404	μPD4066C	Analog Switch	2	
IC701, 702	AN7156NBTL	Power Amp	2	
IC801	MA3207	BBD	1	
IC802	MN3102	BBD Driver	1	
IC803, 804	AN6552	BBD Amp	2	
IC805	μPC566H	PRE Amp	1	
IC806	M54832P	Channel Selector	1	
		COILS AND TRANSFORMERS		
L1, 2	SLQX47G-2Z	Coil Peaking	2	
L101	SLA4P24-Z	Ant Coil, FM	1	
L102	SLO4P24-Z	OSC Coil, FM	1	
L201	RLF2D153	Ferrite Ant	1	
L202	SLO2M10-M	OSC, AM	1	
L203	RLM1Z4	RFC	1	
L401, 402	SLQX272-2K	Coil, Peaking	2	
L403, 404	SLM9Z6-M	Coil, Dolby Trap	2	
L801, 802	SLQV393-4M	Trap Coil	2	
Z801	SL09Z44-K	Bias OSC Block	1	
T101	RLI4M101	1st IFT, FM	1	
T201	RLI2M210	1st IFT, AM	1	
T202	SLI2M202-M	2nd IFT, AM	1	
T203	RLI4M501	IFT, FM Disc	1	
T204	RLI4M502	IFT, FM Disc	1	
T901	SLT5M146-V	Power Transformer	1	⚠
CF201, 202	SVF107MA53	Ceramic Filter, FM	2	
CF203	SVFSFU450E	Ceramic Filter, AF	1	
		VARIABLE RESISTORS		
VR301	EVTS3MA00B23	Preset, 2kΩ (B)	1	S
VR302	EVTS3MA00B53	Preset, 5kΩ (B)	1	
VR401, 402	EWKNEAF22B14	Variable Resistor, 10kΩ (B)	1	
VR405, 406	EVTT3AA00B15	Preset, 100kΩ (B)	2	
VR407, 408	EVTT3AA00B14	Preset, 10kΩ (B)	2	
VR501, 502	EWK5DA064A54	Variable Resistor, 50kΩ (A)	1	
VR503, 504	EWK5DA064A54	Variable Resistor, 50kΩ (A)	1	
VR505, 506	EWK6DA031A54	Variable Resistor, 50kΩ (A)	1	
VR507	EVH7XAF30G15	Variable Resistor, 100kΩ (G)	1	
VR508, 509	EVBV0AD15B54	Variable Resistor, 50kΩ (B)	1	
VR801, 802	EVH7XAF30B14	Variable Resistor, 10kΩ (B)	2	
VR803, 804	EVH7XAF30B14	Variable Resistor, 10kΩ (B)	2	
VR806	EVH7XAF30B14	Variable Resistor, 10kΩ (B)	1	
VR807	EVTS3MA00B14	Variable Resistor, 10kΩ (B)	1	S
VR808	EVTT3AA00B14	Preset, 10kΩ (B)	1	
VR809	EVTS3MA00B14	Variable Resistor,	1	S
VR810	EVTS3AA00B54	Variable Resistor, 50kΩ (B)	1	S
VR811, 812	EVTT3AA00B53	Variable Resistor, 5Ω (B)	2	S
VR813	EVH2XAF2014U	Variable Resistor, 50kΩ (ZU)	1	
		VARIABLE CAPACITOR		
CV101, 102, 201, 202, (CT101, 102, 201, 202)				
	SCVCB41EM	Tuning Capacitor w/Trimmer	1	
		COMPONENT COMBINATIONS		
Z101	RXABPF10801H	Component Combination (L, C)	1	
Z201	EXA5DL04CW	Component Combination (C, R)	1	
Z202	EXAF203Z471W	Component Combination (C, C)	1	
Z901, 902	EXAF103Z22EY	Component Combination (C, C)	1	⚠
		SWITCHES		
S1	ESL21131R	Switch, Power	1	⚠
S8	ESE3742	Switch, Voltage Selector	1	⚠
S201	SSR142	Switch, Band Selector	1	
S801	SSL60	Switch, Mode Selector	1	
S802	SSL56	Switch, Tape Selector	1	
S803, 804	SSL62	Switch, Meter Selector, Dolby NR	2	
S805	SSL60	Switch, Rec Mode Selector	1	
S806	SSL58	Switch, Rec Mute	1	
S808	SSH104	Switch, Dial Lamp	1	
S809	SSP46	Switch, TPS Program	1	
S810	SSS100	Switch, Stereo/Mono Selector	1	
S811	SSR146	Switch, Echo Selector	1	
SF1 ~ 4	SSR138	Switch, Function Selector	1	
ST1 ~ 12	ESD81564	Switch, Rec/Play Selector	1	

Ref. No.	Part No.	Part Name & Description			Per Set	Remarks
		LAMP AND FUSE				
PL901	XAMR51X400	12.6V 50mA			1	⚠
F901	XBA2C50TR0	Fuse, 5A			1	⚠
		METER				
M1	EMT1920	Meter			1	
		RESISTORS (Value is in OHMS)				
R001	ERD25FJ102	1k	1/4W	Carbon	2	S
R002	ERD25FJ332	3.3k	1/4W	Carbon	2	S
R003	ERD25FJ473	47k	1/4W	Carbon	2	S
R004	ERD25FJ181	180	1/4W	Carbon	2	S
R005	ERD25TJ105	1	1/4W	Carbon	2	S
R006	ERD25TJ184	180k	1/4W	Carbon	2	S
R008	ERD25TJ274	270k	1/4W	Carbon	2	S
R009	ERD25FJ102	1k	1/4W	Carbon	2	S
R010	ERD25FJ102	1k	1/4W	Carbon	2	S
R101	ERD25FJ101	100	1/4W	Carbon	1	S
R102	ERD25FJ122	1.2k	1/4W	Carbon	1	S
R103	ERD25FJ470	47	1/4W	Carbon	1	S
R104	ERD25FJ101	100	1/4W	Carbon	1	S
R105	ERD25TJ104	100k	1/4W	Carbon	1	S
R106	ERD25FJ103	10k	1/4W	Carbon	1	S
R201	ERD25FJ101	100	1/4W	Carbon	1	S
R202	ERD25TJ474	470k	1/4W	Carbon	1	S
R203	ERD25FJ471	470	1/4W	Carbon	1	S
R204	ERD25FJ331	330	1/4W	Carbon	1	S
R205	ERD25FJ102	1k	1/4W	Carbon	1	S
R206	ERD25FJ221	220	1/4W	Carbon	1	S
R207	ERD25FJ181	180	1/4W	Carbon	1	S
R208	ERD25FJ221	220	1/4W	Carbon	1	S
R209	ERD25FJ152	1.5k	1/4W	Carbon	1	S
R210	ERD25FJ221	220	1/4W	Carbon	1	S
R211	ERD25FJ333	33k	1/4W	Carbon	1	S
R212	ERD25FJ684	680k	1/4W	Carbon	1	S
R213, 214	ERD25FJ102	1k	1/4W	Carbon	2	S
R215	ERD25TJ474	470k	1/4W	Carbon	1	S
R216	ERD25FJ222	2.2k	1/4W	Carbon	1	S
R217	ERD25FJ681	680	1/4W	Carbon	1	S
R219	ERD25FJ103	10k	1/4W	Carbon	1	S
R220	ERD25TJ224	220k	1/4W	Carbon	1	S
R221	ERD25FJ101	100	1/4W	Carbon	1	S
R222	ERD25FJ822	8.2k	1/4W	Carbon	1	S
R223	ERD25FJ682	6.8k	1/4W	Carbon	1	S
R224	ERD25FJ123	12k	1/4W	Carbon	1	S
R225	ERD25FJ182	1.8k	1/4W	Carbon	1	S
R226	ERD25TJ683	68k	1/4W	Carbon	1	S
R227	ERD25FJ221	220	1/4W	Carbon	1	S
R301	ERD2FCG150	15	2W	Fuse	1	⚠
R302, 303	ERD25FJ332	3.3k	1/4W	Carbon	2	S
R304	ERD25FJ682	6.8k	1/4W	Carbon	1	S
R305	ERD25FJ332	3.3k	1/4W	Carbon	1	S
R306	ERD25FJ102	1k	1/4W	Carbon	1	S
R307	ERD25FJ103	10k	1/4W	Carbon	1	S
R308, 309	ERD25FJ473	47k	1/4W	Carbon	2	S
R310	ERD25FJ103	10k	1/4W	Carbon	1	S
R311	ERD25FJ393	39k	1/4W	Carbon	1	S

Ref. No.	Part No.	Part Name & Description			Per Set	Remarks
R401, 402	ERD25FJ100	10	1/4W	Carbon	2	S
R403, 404	ERD25FJ333	33k	1/4W	Carbon	2	S
R405, 406	ERD25FJ472	4.7k	1/4W	Carbon	2	S
R407, 408	ERD25FJ273	27k	1/4W	Carbon	2	S
R409, 410	ERD25TJ104	100k	1/4W	Carbon	2	S
R411, 412	ERD25FJ332	3.3k	1/4W	Carbon	2	S
R413, 414	ERD25FJ331	330	1/4W	Carbon	2	S
R415, 416	ERD25FJ562	5.6k	1/4W	Carbon	2	S
R417, 418	ERD25TJ105	1	1/4W	Carbon	2	S
R419, 420	ERD25FJ333	33k	1/4W	Carbon	2	S
R421, 422	ERD25FJ473	47k	1/4W	Carbon	2	S
R423, 424	ERD25TJ683	68k	1/4W	Carbon	2	S
R425, 426	ERD25FJ822	8.2k	1/4W	Carbon	2	S
R427, 428	ERD25FJ103	10k	1/4W	Carbon	2	S
R431, 432	ERD25FJ682	6.8k	1/4W	Carbon	2	S
R433, 434	ERD25TJ333	33k	1/4W	Carbon	2	S
R435, 436	ERD25FJ221	220	1/4W	Carbon	2	S
R437, 438	ERD25FJ223	22k	1/4W	Carbon	2	S
R439, 440	ERD25TJ683	68k	1/4W	Carbon	2	S
R441, 442	ERD25TJ124	120k	1/4W	Carbon	2	S
R443	ERD25FJ103	10k	1/4W	Carbon	1	S
R444	ERD25TJ154	150k	1/4W	Carbon	1	S
R445, 446	ERD25FJ183	18k	1/4W	Carbon	2	S
R449, 450	ERD25FJ682	6.8k	1/4W	Carbon	2	S
R451, 452	ERD25FJ332	3.3k	1/4W	Carbon	2	S
R453, 454	ERD25FJ822	8.2k	1/4W	Carbon	2	S
R455, 456	ERD25TJ333	33k	1/4W	Carbon	2	S
R457, 458	ERD25TJ224	220k	1/4W	Carbon	2	S
R459, 460	ERD25FJ561	560	1/4W	Carbon	2	S ⚠
R461, 462	ERD25FJ332	3.3k	1/4W	Carbon	2	S
R463, 464	ERD25FJ472	4.7k	1/4W	Carbon	2	S
R465, 466	ERD25FJ561	560	1/4W	Carbon	2	S
R467, 468	ERD25FJ391	390	1/4W	Carbon	2	S
R469	ERD25FJ101	100	1/4W	Carbon	1	S
R470	ERD25FJ1R0	1	1/4W	Carbon	1	S
R471	ERD25FJ101	100	1/4W	Carbon	1	S
R473, 474	ERD25FJ152	1.5k	1/4W	Carbon	2	S
R475, 476	ERD25FJ332	3.3k	1/4W	Carbon	2	S
R481	ERD25FJ101	100	1/4W	Carbon	1	S
R482	ERD25TJ104	100k	1/4W	Carbon	1	S
R483	ERD25FJ333	33k	1/4W	Carbon	1	S
R484	ERD25FJ223	22k	1/4W	Carbon	1	S
R485	ERD25TJ474	470k	1/4W	Carbon	1	S
R486	ERD25TJ104	100k	1/4W	Carbon	1	S
R487, 488	ERD25FJ222	2.2k	1/4W	Carbon	2	S
R489, 490	ERD25FJ472	4.7k	1/4W	Carbon	2	S
R491, 492	ERD25FJ333	33k	1/4W	Carbon	2	S
R493, 494	ERD25FJ222	2.2k	1/4W	Carbon	2	S
R495, 496	ERD25FJ222	2.2k	1/4W	Carbon	2	S
R501, 502	ERD25FJ563	56k	1/4W	Carbon	2	S
R503, 504	ERD25TJ822	8.2k	1/4W	Carbon	2	S
R505, 506	ERD25FJ332	3.3k	1/4W	Carbon	2	S
R507, 508	ERD25FJ563	56k	1/4W	Carbon	2	S
R509, 510	ERD25FJ563	56k	1/4W	Carbon	2	S
R511, 512	ERD25FJ473	47k	1/4W	Carbon	2	S
R513, 514	ERD25FJ123	12k	1/4W	Carbon	2	S
R515, 516	ERD25FJ273	27k	1/4W	Carbon	2	S
R517, 518	ERD25TJ155	1.5	1/4W	Carbon	2	S

Ref. No.	Part No.	Part Name & Description			Per Set	Remarks
R519, 520	ERD25FJ822	8.2k	1/4W	Carbon	2	S
R521, 522	ERD25FJ820	82	1/4W	Carbon	2	S
R523, 524	ERD25FJ331	330	1/4W	Carbon	2	S
R525, 526	ERD25FJ152	1.5k	1/4W	Carbon	2	S
R527, 528	ERD25FJ153	15k	1/4W	Carbon	2	S
R529, 530	ERD25FJ472	4.7k	1/4W	Carbon	2	S
R531, 532	ERD25FJ103	10k	1/4W	Carbon	2	S
R533, 534	ERD25FJ103	10k	1/4W	Carbon	2	S
R535	ERD25FJ101	100	1/4W	Carbon	1	S
R537, 538	ERD25FJ152	1.5k	1/4W	Carbon	2	S
R541, 542	ERD25TJ155	1.5	1/4W	Carbon	2	S
R543	ERD25FJ102	1k	1/4W	Carbon	1	S
R544, 545	ERD25FJ223	22k	1/4W	Carbon	2	S
R601, 602	ERD25FJ102	1k	1/4W	Carbon	2	S
R603, 604	ERD25TJ104	100k	1/4W	Carbon	2	S
R605, 606	ERD25TJ154	150k	1/4W	Carbon	2	S
R607, 608	ERD25FJ222	2.2k	1/4W	Carbon	2	S
R609, 610	ERD25TJ104	100k	1/4W	Carbon	2	S
R611	ERD25FJ333	33k	1/4W	Carbon	1	S
R613, 614	ERD25FJ682	6.8k	1/4W	Carbon	2	S
R615, 616	ERD25FJ152	1.5k	1/4W	Carbon	2	S
R617, 618	ERD25TJ124	120k	1/4W	Carbon	2	S
R619, 620	ERD25FJ153	15k	1/4W	Carbon	2	S
R621, 622	ERD25TJ683	68k	1/4W	Carbon	2	S
R701, 702	ERD25FJ222	2.2k	1/4W	Carbon	2	S
R703, 704	ERD25FJ472	4.7k	1/4W	Carbon	2	S
R705, 706	ERD25FJ470	47	1/4W	Carbon	2	S
R707, 708	ERD25FJ470	47	1/4W	Carbon	2	S
R709, 710	ERD10TJ2R2	2.2	1/8W	Carbon	2	S ⚠
R711, 712	ERD25FJ820	82	1/4W	Carbon	2	S
R713, 714	ERD25FJ333	33k	1/4W	Carbon	2	S
R715, 716	ERD25FJ820	82k	1/4W	Carbon	2	S
R717, 718	ERD10TJ2R2	2.2	1/8W	Carbon	2	S ⚠
R719, 720	ERD50FJ221	220	1/2W	Carbon	2	S
R801, 802	ERD25TJ105	1	1/4W	Carbon	2	S
R803, 804	ERD25FJ682	6.8k	1/4W	Carbon	2	S
R805, 806	ERD25FJ101	100	1/4W	Carbon	2	S
R807	ERD25TJ105	1	1/4W	Carbon	1	S
R808	ERD25FJ332	3.3k	1/4W	Carbon	1	S
R809	ERD25FJ102	1k	1/4W	Carbon	1	S
R810	ERD25TJ684	680k	1/4W	Carbon	1	S
R811	ERD25FJ471	470	1/4W	Carbon	1	S
R812	ERD25FJ152	1.5k	1/4W	Carbon	1	S
R813, 814	ERD25FJ153	15k	1/4W	Carbon	2	S
R815, 816	ERD25TJ105	1	1/4W	Carbon	2	S
R817, 818	ERD25FJ153	15k	1/4W	Carbon	2	S
R819, 820	ERD25FJ560	56	1/4W	Carbon	2	S
R821	ERD25FJ102	1k	1/4W	Carbon	1	S
R823	ERD25FJ392	3.9k	1/4W	Carbon	1	S
R824, 825	ERD25FJ273	27k	1/4W	Carbon	2	S
R828, 829	ERD25TJ274	270k	1/4W	Carbon	2	S
R830	ERD25FJ822	8.2k	1/4W	Carbon	1	S
R831	ERD25FJ153	15k	1/4W	Carbon	1	S
R832	ERD25TJ105	1	1/4W	Carbon	1	S
R833	ERD25FJ153	15k	1/4W	Carbon	1	S
R834	ERD25FJ560	56	1/4W	Carbon	1	S
R835	ERD25FJ822	8.2k	1/4W	Carbon	1	S
R836	ERD25FJ823	82k	1/4W	Carbon	1	S

Ref. No.	Part No.	Part Name & Description			Per Set	Remarks
R837, 838	ERD25FJ393	39k	1/4W	Carbon	2	S
R839	ERD25FJ183	18k	1/4W	Carbon	1	S
R840	ERD25FJ562	5.6k	1/4W	Carbon	1	S
R841, 842	ERD25TJ104	100k	1/4W	Carbon	2	S
R843, 844	ERD25FJ562	5.6k	1/4W	Carbon	2	S
R845, 846	ERD25FJ393	39k	1/4W	Carbon	2	S
R847	ERD25FJ183	18k	1/4W	Carbon	1	S
R848	ERD25FJ562	5.6k	1/4W	Carbon	1	S
R849	ERD25FJ123	12k	1/4W	Carbon	1	S
R850	ERD25FJ393	39k	1/4W	Carbon	1	S
R851	ERD25FJ123	12k	1/4W	Carbon	1	S
R852	ERD25FJ562	5.6k	1/4W	Carbon	1	S
R854	ERD25FJ153	15k	1/4W	Carbon	1	S
R855	ERD25TJ683	68k	1/4W	Carbon	1	S
R856	ERD25FJ393	39k	1/4W	Carbon	1	S
R857, 858	ERD25TJ104	100k	1/4W	Carbon	2	S
R860	ERD25FJ223	22k	1/4W	Carbon	1	S
R861	ERD25FJ273	27k	1/4W	Carbon	1	S
R862	ERD25FJ333	33k	1/4W	Carbon	1	S
R863	ERD25TJ224	220k	1/4W	Carbon	1	S
R864	ERD25FJ682	6.8k	1/4W	Carbon	1	S
R865, 866	ERD25TJ823	82k	1/4W	Carbon	2	S
R867	ERD25FJ681	680	1/4W	Carbon	1	S
R868, 869	ERD25FJ391	390	1/4W	Carbon	2	S
R870	ERD25FJ563	56k	1/4W	Carbon	1	S
R871, 872	ERD25FJ473	47k	1/4W	Carbon	2	S
R873	ERD25FJ473	47k	1/4W	Carbon	1	S
R874	ERD25FJ681	680	1/4W	Carbon	1	S
R875	ERD25TJ683	68k	1/4W	Carbon	1	S
R876	ERD25FJ472	4.7k	1/4W	Carbon	1	S
R877	ERD25FJ221	220	1/4W	Carbon	1	S
R878	ERD25FJ473	47k	1/4W	Carbon	1	S
R879	ERD25FJ333	33k	1/4W	Carbon	1	S
R881	ERD25FJ682	6.8k	1/4W	Carbon	1	S
R882	ERD25FJ183	18k	1/4W	Carbon	1	S
R883	ERD25FJ472	4.7k	1/4W	Carbon	1	S
R884	ERD25TJ104	100k	1/4W	Carbon	1	S
R885, 886	ERD25TJ154	150k	1/4W	Carbon	2	S
R887	ERD25FJ103	10k	1/4W	Carbon	1	S
R888	ERD25FJ151	150	1/4W	Carbon	1	S
R889	ERD25FJ103	10k	1/4W	Carbon	1	S
R890	ERD25FJ473	47k	1/4W	Carbon	1	S
R891	ERD25FJ103	10k	1/4W	Carbon	1	S
R892	ERD25FJ333	33k	1/4W	Carbon	1	S
R893	ERD25FJ103	10k	1/4W	Carbon	1	S
R894	ERD25FJ102	1k	1/4W	Carbon	1	S
R895	ERD25FJ103	10k	1/4W	Carbon	1	S
R896	ERD25FJ473	47k	1/4W	Carbon	1	S
R897	ERD25FJ221	220	1/4W	Carbon	1	S
R901	ERD25FJ221	220	1/4W	Carbon	1	S
R902	ERD25FJ122	1.2k	1/4W	Carbon	1	S
R903	ERD2FCG100	10	2W	Fuse	1	⚠
R904	ERD25FJ221	220	1/4W	Carbon	1	S
R905	ERD25FJ472	4.7k	1/4W	Carbon	1	S
R8001,8002	ERD25TJ154	150k	1/4W	Carbon	2	S
R8003,8004	ERD25FJ122	1.2k	1/4W	Carbon	2	S
R8005,8006	ERD25FJ681	680	1/4W	Carbon	2	S
R8007	ERD25FJ122	1.2k	1/4W	Carbon	1	S

Ref. No.	Part No.	Part Name & Description			Per Set	Remarks
R8008	ERD25FJ222	2.2k	1/4W	Carbon	1	S
R8009	ERD25FJ103	10k	1/4W	Carbon	1	S
R8010	ERD25FJ332	3.3k	1/4W	Carbon	1	S
R8011,8012	ERD25FJ681	680	1/4W	Carbon	2	S
R8013	ERD25FJ271	270	1/4W	Carbon	1	S
R8014	ERD25FJ390	39	1/4W	Carbon	1	S
R8015	ERD25FJ101	100	1/4W	Carbon	1	S
R8016	ERD25FJ333	33k	1/4W	Carbon	1	S
R8017	ERD25FJ273	27k	1/4W	Carbon	1	S
R8018	ERD25FJ153	15k	1/4W	Carbon	1	S
R8019	ERD25TJ154	150k	1/4W	Carbon	1	S
R8021,8022	ERD25FJ273	27k	1/4W	Carbon	2	S
R8027	ERD25TJ274	270k	1/4W	Carbon	1	S
R8028	ERD25FJ102	1k	1/4W	Carbon	1	S
R8029	ERD2FCJ4R7	4.7	2W	Fuse	1	⚠
R8030	ERD25TJ154	150k	1/4W	Carbon	1	S
R8031	ERD25FJ332	3.3k	1/4W	Carbon	1	S
R8035	ERD25FJ221	220	1/4W	Carbon	1	S
R8039,8040	ERD25TJ823	82k	1/4W	Carbon	2	S
CAPACITORS (Value is in MICRO FARADS except. P.P = PICO FARADS)						
C001	ECEA50MR68R	0.68	50V	Electrolytic	2	S
C002	ECEA1HS100	10	50V	Electrolytic	2	S
C003	ECEA1HS100	10	50V	Electrolytic	2	S
C004	ECQM1H273JZ	0.027	50V	Polyester	2	S
C005	ECQS1472JZ	4700p	125V	Polystyrene Film	2	S
C006	ECQS1562JZ	5600p	125V	Polystyrene Film	2	S
C007	ECEA1HS100	10	50V	Electrolytic	2	S
C008	ECQM1H473JZ	0.047	50V	Polyester	2	S
C009	ECEA1HS100	10	50V	Electrolytic	2	S
C010	ECEA50MR1R	0.1	50V	Electrolytic	2	S
C011	ECEA50MR33R	0.33	50V	Electrolytic	2	S
C012	ECEA1AS221	220	10V	Electrolytic	2	S
C013	ECQM1H332KZ	0.0033	50V	Polyester	2	S
C1, 2	ECEA50Y4R7	4.7	50V	Electrolytic	2	S
C3	ECKD1H223ZF	0.022	50V	Ceramic	1	S
C101	ECFD1E103MD	0.01	25V	Semi-Conductor	1	S
C102	ECKD1H103ZF	0.01	50V	Ceramic	1	S
C103	ECCD1H180K	18p	50V	Ceramic	1	S
C104	ECCD1H100F	10p	50V	Ceramic	1	S
C105	ECCD1H150K	15p	50V	Ceramic	1	S
C106	ECCD1H150KC	15p	50V	Ceramic	1	S
C107	ECCD1H050D	5p	50V	Ceramic	1	S
C108, 109	ECKD1H103ZF	0.01	50V	Ceramic	2	S
C110	ECFD1E223MD	0.022	25V	Semi-Conductor	1	S
C111	ECFD1E473MD	0.047	25V	Semi-Conductor	1	S
C112	ECEA1ES101	100p	25V	Electrolytic	1	S
C113	ECCD1H040C	4p	50V	Ceramic	1	S
C114	ECFD1E223MD	0.022	25V	Semi-Conductor	1	S
C115	ECFD1E473MD	0.047	25V	Semi-Conductor	1	S
C116	ECFD1E103MD	0.01	25V	Semi-Conductor	1	S
C201	ECKD1H102KB	0.001	50V	Ceramic	1	S
C202, 203	ECKD1H103ZF	0.01	50V	Ceramic	2	S
C204	ECCD1H270K	27p	50V	Ceramic	1	S
C205	ECFD1E223MD	0.022	25V	Semi-Conductor	1	S
C206	ECCD1H220K	22p	50V	Ceramic	1	S
C207, 208	ECFD1E223MD	0.022	25V	Semi-Conductor	2	S

Ref. No.	Part No.	Part Name & Description			Per Set	Remarks
C209	ECFD1E223MD	0.022	25V	Semi-Conductor	1	S
C210	ECFD1E473MD	0.047	25V	Semi-Conductor	1	S
C211	ECCD1H220K	22p	50V	Ceramic	1	S
C212, 213	ECFD1E223MD	0.022	25V	Semi-Conductor	2	S
C214	ECKD1H103ZF	0.01	50V	Ceramic	1	S
C215	ECEA50Z3R3	3.3	50V	Electrolytic	1	S
C216	ECCD1H330K	33p	50V	Ceramic	1	S
C217	ECFD1E223MD	0.022	25V	Semi-Conductor	1	S
C218	ECEA1HS100	10	50V	Electrolytic	1	S
C221	ECFD1E223MD	0.022	25V	Semi-Conductor	1	S
C222	ECEA25Z4R7	4.7	25V	Electrolytic	1	S
C223	ECKD1H103ZF	0.01	50V	Ceramic	1	S
C224, 225	ECFD1E103MD	0.01	25V	Semi-Conductor	2	S
C226	ECFD1E223MD	0.022	25V	Semi-Conductor	1	S
C227	ECFD1E103MD	0.01	25V	Semi-Conductor	1	S
C228	ECEA50MR68R	0.68	50V	Electrolytic	1	S
C229	ECFD1E223MD	0.033	25V	Semi-Conductor	1	S
C230	ECEA1HS100	10	50V	Electrolytic	1	S
C231	ECKD1H103ZF	0.01	50V	Ceramic	1	S
C232	ECCD1H020C	2p	50V	Ceramic	1	S
C233	ECCD1H080D	8p	10V	Ceramic	1	S
C301	ECEA1AS471	470	10V	Electrolytic	1	S
C302	ECFD1E473MD	0.047	25V	Semi-Conductor	1	S
C303	ECQS1152JZ	1500p	125V	Polystyrene Film	1	S
C304	ECEA50M1R	1	50V	Electrolytic	1	S
C305, 306	ECFD1E103MD	0.01	25V	Semi-Conductor	2	S
C307, 308	ECEA50MR22R	0.22	50V	Electrolytic	2	S
C309	ECEA50MR22R	0.22	50V	Electrolytic	1	S
C310	ECEA50MR47R	0.47	50V	Electrolytic	1	S
C311	ECEA50Z1	1	50V	Electrolytic	1	S
C401, 402	ECKD1H681KB	680p	50V	Ceramic	2	S
C403, 404	ECEA1C330	33	16V	Electrolytic	2	S
C405, 406	ECKD1H332KD	0.0033	50V	Ceramic	2	S
C407, 408	ECFD1E332KD	0.0033	50V	Semi-Conductor	2	S
C409, 410	ECKD1H222KB	0.0022	50V	Ceramic	2	S
C411, 412	ECKD1H681KB	680p	50V	Ceramic	2	S
C413, 414	ECEA1HS100	10	50V	Electrolytic	2	S
C415, 416	ECEA1HS100	10	50V	Electrolytic	2	S
C417, 418	ECEA1HS100	10	50V	Electrolytic	2	S
C419, 420	ECEA50MR47R	0.47	50V	Electrolytic	2	S
C421, 422	ECFD1E103MD	0.01	25V	Semi-Conductor	2	S
C423	ECEA1HS100	10	50V	Electrolytic	1	S
C424	ECEA50Z1	1	50V	Electrolytic	1	S
C425	ECKD1H223ZF	0.022	50V	Ceramic	1	S
C426	ECEA1HS100	10	50V	Electrolytic	1	S
C429, 430	ECEA50MR68R	0.68	50V	Electrolytic	2	S
C431, 432	ECEA50Z1	1	50V	Electrolytic	2	S
C433, 434	ECEA50Z3R3	3.3	50V	Electrolytic	2	S
C435, 436	ECQM1H103KZ	0.01	50V	Polyester	2	S
C437, 438	ECQM1H154KZ	0.15	50V	Polyester	2	S
C439, 440	ECQM1H393KZ	0.039	50V	Polyester	2	S
C441	ECEA1CS221	220	16V	Electrolytic	1	S
C443, 444	ECEA1HS100	10	50V	Electrolytic	2	S
C445, 446	ECQM1H103KZ	0.01	50V	Polyester	2	S
C447, 448	ECKD1H821KB	820p	50V	Ceramic	2	S
C449	ECEA1CS221	220	16V	Electrolytic	1	S
C453, 454	ECKD1H102KB	0.001	50V	Ceramic	2	S
C455, 456	ECCD1H270K	27p	50V	Ceramic	2	S

Ref. No.	Part No.	Part Name & Description			Per Set	Remarks
C501, 502	ECEA50M3R3R	3.3	50V	Electrolytic	2	S
C503, 504	ECEA50Z1	1	50V	Electrolytic	2	S
C505, 506	ECFD1E223MD	0.022	25V	Semi-Conductor	2	S
C507, 508	ECEA50MR22R	0.22	50V	Electrolytic	2	S
C509, 510	ECKD1H682KD	0.0068	50V	Ceramic	2	S
C511, 512	ECFD1E473MD	0.047	25V	Semi-Conductor	2	S
C513, 514	ECKD1H222MD	0.0022	50V	Ceramic	2	S
C515, 516	ECEA50MR22R	0.22	50V	Electrolytic	2	S
C517, 518	ECKD1H472KD	0.0047	50V	Ceramic	2	S
C519	ECEA1ES101	100	25V	Electrolytic	1	S
C520, 521	ECKD1H222KD	0.0022	50V	Ceramic	2	S
C552	ECEA50Z1	1	50V	Electrolytic	1	S
C523	ECEA1ES221	220	25V	Electrolytic	1	S
C601, 602	ECEA50MR22R	0.22	50V	Electrolytic	2	S
C603, 604	ECKD1H102KB	0.001	50V	Ceramic	2	S
C605, 606	ECEA1AS470	47	10V	Electrolytic	2	S
C607, 608	ECCD1H680K	68p	50V	Ceramic	2	S
C609, 610	ECQM1H562KZ	0.0056	50V	Polyester	2	S
C611, 612	ECFD1E223MD	0.022	25V	Semi-Conductor	2	S
C613, 614	ECEA50MR47R	0.47	50V	Electrolytic	2	S
C615	ECEA1ES101	100	25V	Electrolytic	1	S
C617	ECEA1ES221	220	25V	Electrolytic	1	S
C701, 702	ECQM1H104KS	0.1	50V	Polyester	2	S
C703, 704	ECEA1CS330	33	16V	Electrolytic	2	S
C705, 706	ECEA1AS470	47	10V	Electrolytic	2	S
C707, 708	ECKD1H102KB	0.001	50V	Ceramic	2	S
C709, 710	ECEA50M1R	1	50V	Electrolytic	2	S
C711, 712	ECEA1AS101	100	10V	Electrolytic	2	S
C713, 714	ECEA1AS470	47	10V	Electrolytic	2	S
C715, 716	ECQM1H104KS	0.1	50V	Polyester	2	S
C717, 718	ECEA1ES101	100	25V	Electrolytic	2	S
C719, 720	ECEA1HS100	10	50V	Electrolytic	2	S
C721	ECEA1ES101	100	25V	Electrolytic	1	S
C801, 802	ECEA50MR47R	0.47	50V	Electrolytic	2	S
C803, 804	ECCD1H330K	33p	50V	Ceramic	2	S
C805, 806	ECKD1H102KB	0.001	50V	Ceramic	2	S
C807, 808	ECEA50Z1	1	50V	Electrolytic	2	S
C809	ECEA50MR1R	0.1	50V	Electrolytic	1	S
C810	ECCD1H330K	33p	50V	Ceramic	1	S
C811	ECKD1H102KB	0.001	50V	Ceramic	1	S
C812	ECEA50Z1	1	50V	Electrolytic	1	S
C813, 814	ECEA50MR1R	0.1	50V	Electrolytic	2	S
C815, 816	ECKD1H102KB	0.001	50V	Ceramic	2	S
C817, 818	ECEA50Z1	1	50V	Electrolytic	2	S
C819	ECFD1E223MD	0.022	25V	Semi-Conductor	1	S
C820, 821	ECEA50MR1R	0.1	50V	Electrolytic	2	S
C822	ECEA50Z1	1	50V	Electrolytic	1	S
C823	ECEA1CS8221	220	16V	Electrolytic	1	S
C824	ECEA1ES101	100	25V	Electrolytic	1	S
C825	ECEA1HN010	1	50V	Electrolytic	1	S
C827	ECKD1H222KD	0.0022	50V	Ceramic	1	S
C828	ECFD1E223MD	0.022	25V	Semi-Conductor	1	S
C829	ECEA50Z3R3	3.3	50V	Electrolytic	1	S
C830	ECEA1HN010	1	50V	Electrolytic	1	S
C831	ECFD1E333MD	0.033	25V	Semi-Conductor	1	S
C832	ECKD1H332KD	0.0033	50V	Ceramic	1	S
C833	ECFD1E333MD	0.033	25V	Semi-Conductor	1	S
C834	ECEA1HN010	1	50V	Electrolytic	1	S

Ref. No.	Part No.	Part Name & Description			Per Set	Remarks
C835	ECFD1E333MD	0.033	25V	Semi-Conductor	1	S
C836	ECKD1H332KD	0.0033	50V	Ceramic	1	S
C837	ECFD1E223MD	0.022	25V	Semi-Conductor	1	S
C838, 839	ECEA50Z1	1	50V	Electrolytic	2	S
C840	ECEA50Z3R3	3.3	50V	Electrolytic	1	S
C841	ECKD1H222KD	0.0022	50V	Ceramic	1	S
C842	ECEA25Z4R7	4.7	25V	Electrolytic	1	S
C843, 844	ECKD1H221KB	220p	50V	Ceramic	2	S
C846	ECKD1H471KB	470p	50V	Ceramic	1	S
C847	ECKD1H221JZ	220p	50V	Ceramic	1	S
C848, 849	ECEA25Z4R7	4.7	25V	Electrolytic	2	S
C850	ECEA25Z4R7	4.7	25V	Electrolytic	1	S
C851	ECEA1CS330	33	16V	Electrolytic	1	S
C852	ECEA1HS100	10	50V	Electrolytic	1	S
C853	ECFD1E103MD	0.01	25V	Semi-Conductor	1	S
C854	ECEA1HS100	10	50V	Electrolytic	1	S
C855	ECEA1ES220	22	25V	Electrolytic	1	S
C856	ECKD1H102KB	0.001	50V	Ceramic	1	S
C857	ECKD1H101KB	100p	50V	Ceramic	1	S
C858	ECEA50MR22R	0.22	50V	Electrolytic	1	S
C859	ECEA1CS330	33	16V	Electrolytic	1	S
C860	ECEA50Z1	1	50V	Electrolytic	1	S
C861, 862	ECEA25Z4R7	4.7	25V	Electrolytic	2	S
C863	ECEA1HS100	10	50V	Electrolytic	1	S
C866	ECEA1ES101	100	25V	Electrolytic	1	S
C867, 868	ECEA50Z1	1	50V	Electrolytic	2	S
C869, 870	ECEA50Z1	1	50V	Electrolytic	2	S
C871, 872	ECEA1HS100	10	50V	Electrolytic	2	S
C873, 874	ECKD1H102KD	0.001	50V	Ceramic	2	S
C875	ECEA1AS101	100	10V	Electrolytic	1	S
C876	ECKD1H331KB	330p	50V	Ceramic	1	S
C877	ECEA50MR47R	0.47	50V	Electrolytic	1	S
C878	ECKD1H102KB	0.001	50V	Ceramic	1	S
C879	ECEA1CS221	220	16V	Electrolytic	1	S
C880, 881	ECEA1ES470	47	25V	Electrolytic	2	S
C882	ECKD1H223ZF	0.022	50V	Ceramic	1	S
C883	ECFD1E103MD	0.01	25V	Semi-Conductor	1	S
C884	ECCD1H151K	150p	50V	Ceramic	1	S
C887, 888	ECKD1H472KD	0.047	50V	Ceramic	2	S
C891	ECKD1H223ZF	0.022	50V	Ceramic	1	S
C901	ECKD1H103ZF	0.01	50V	Ceramic	1	S
C902	ECEA1AS221	220	10V	Electrolytic	1	S
C903	ECEA1VS102	1000	36V	Electrolytic	1	S
C904	ECEA1ES101	100	25V	Electrolytic	1	S
C905	ECET25R103SW	0.01	25V	Electrolytic	1	S
C906	ECEA1AS101	100	10V	Electrolytic	1	S
C907	ECEA1CS330	33	16V	Electrolytic	1	S

ELECTRICAL PARTS

E1	SDH270-1	Pointer Guide	1	
E2	SUW1750	Bracket A	1	
E3	SDT1272	Tuning Shaft	1	
E4	SDD80-1	Dial Drum	1	
E5	RDS417	Spring	1	
E6	RDZ05A	Dial Cord	125	
E7	SDR10	Roller	4	
E8	RHG211	Rubber, Stereo Eye	1	
E9	SUV206	Cover, Jack	1	⚠

Ref. No.	Part No.	Part Name & Description	Per Set	Remarks
E10	SMC308	Bracket B	1	
E11	SMC326	Bracket C	1	
E12	SMC230-1	Bracket D	1	
E13	SMX218	Insulator	1	
E14	SMX188	Spacer A	1	
E15	SDP1034	Dial Pointer	1	
E15-1	(SWE28-1)	Lamp, Dial Pointer	(1)	
E16	SJC118	Terminal, Battery (+)	4	
E17	SJC514	Terminal, Battery (−)	4	
E18	RHR969Z	Latch A	10	
E19	SHR9112	Latch B	5	
E21	SUV387C	Cover, Voltage Selector	1	⚠
E22	SJF110	Holder, Fuse	2	⚠
E23	SJF9902	Terminal Board	1	
E24	SJF4303	Terminal, Antenna	1	
E25	QJS0329	Jack, AC/DC	1	⚠
E26	SUV214	Cover, Terminal	1	
E27	SHR9146	Sheet	1	
E28	XCJ6P21F	Jack, Head Phone	1	
E29	XCJ6P21A	Jack, Micro Phone	4	
		CABINET PARTS		
K1	SYK1786	Cabinet A Ass'y	1	
K2	SYK1836	Cabinet B Ass'y	1	
K3	SKH112-1	Handle	1	
K4	SKH114	Cover, Handle	1	
K5	SUD256	Bracket	1	
K6	SBE276-1	Lock	2	
K7	SBE278	Holder, Lock	2	
K8	SBH4002	Hinge	2	
K9	SBH4004	Holder, Hinge	2	
K10	SUW1996	Bracket, Lock	4	
K11	SUW1998-1	Bracket, Hinge	2	
K12	SUW2000-2	Spacer A	3	
K13	SUW2002-1	Spacer B	1	
K14	SUW2004	Spacer C	1	
K15	SUW2048	Bracket, Antenna	1	
K16	SKE366	Accessory Box	1	
K17	SYP544	Panel, Front	1	
K18	SYE652-2	Cassette Lid	1	
K19	SYE736	Connector Plate Ass'y	1	
K20	SYE842	Battery Cover Ass'y	1	
K21	SBC190-1	Button, Reset	1	
K22	SUW2008	Spacer, Reset Button	1	
K23	SHS3020	Felt	1	
K24	XEASDS194EA	Telescopic Antenna	1	
K25	SBN962-1	Konb, Tuning	1	
K26	SBN964	Knob, Volume	1	
K27	SBN966	Knob, Balance	8	
K28	SBN968	Knob, Rec Level	2	
K29	SBN970	Knob, Power	1	
K30	SBN972-1	Knob	6	
K31	SBN982	Lever, Source Attenuator	1	
K32	SBC426	Button, Cassette	6	
K33	SBN974	Knob, Left Rec	1	
K34	SBN976-1	Knob, Right Rec	1	
K35	SYE686-3	Button, Program	1	
K36	SYE740	Button, Light Switch	1	

Ref. No.	Part No.	Part Name & Description	Per Set	Remarks
K37	SGE1158	Cover, Jack	1	
K38	SBN968-1	Knob, Band	1	
K39	SBN968-2	Knob, Selector	1	
K40	SUD242	Spacer A, LED	2	
K41	SUD222	Spacer B, LED	2	
K42	SBN844-2	Knob, Fine Tuning	1	
		SPEAKER BOX		
E1	RJF3109	Terminal, Speaker	2	
E2	ECEA50Y4R7	Capacitor, 50V 4.7μF (C1, 2)	2	
K1	SYK1790	Cabinet Ass'y, Speaker (Right)	1	
K2	SYK1838	Cabinet Ass'y, Speaker (Left)	1	
K3	SKH112-1	Handle (for Right Speaker Box)	1	
K4	SKH114	Cover, Handle (for Right Speaker Box)	1	
K5	SHG9160	Rubber, Cushion (for Right Speaker Box)	2	
K6	SUD258	Bracket, Handle (for Right Speaker Box)	1	
K7	SBE276-1	Lock (for Right Speaker Box)	2	
K8	SBE278	Holder, Lock (for Left Speaker Box)	2	
K9	SBH4002	Hinge (for Left Speaker Box)	2	
K10	SBH4004	Holder, Hinge (for Right Speaker Box)	2	
K11	SUW1996	Bracket, Lock	4	
K12	SUW1998-1	Bracket, Hinge	4	
K13	SYB238-4	Baffle Ass'y, Right	1	
K14	SGX1190	Ornament A, Speaker	2	
K15	SGX1192	Ornament B, Speaker	2	
K16	SGM320	Cover A, Speaker	2	
K17	SGM340	Cover B, Speaker	2	
K18	SYB236-4	Baffle Ass'y, Left	1	
		ACCESSORIES		
A1	RJA20Z	Power Cord	1	⚠
A2	SJP2128	Speaker Cord	2	⚠
A3	SJP2130-1	Car Battery Cord		⚠
A4	RD-44(M)	Microphone	1	
		PACKING MATERIALS		
P1	SPN4356	Carton Box	1	
P2	SPN3994	Pad, Bottom	1	
P3	SPN3996	Pad A, Upper	1	
P4	SPN3998	Pad B, Upper	1	
P5	SPF50	Poly Bag, Power Cord	1	
P6	XZB63X87C05	Poly Bag	2	
		PRINTED MATERIALS		
Y1	RQX6621	Instruction Book	1	